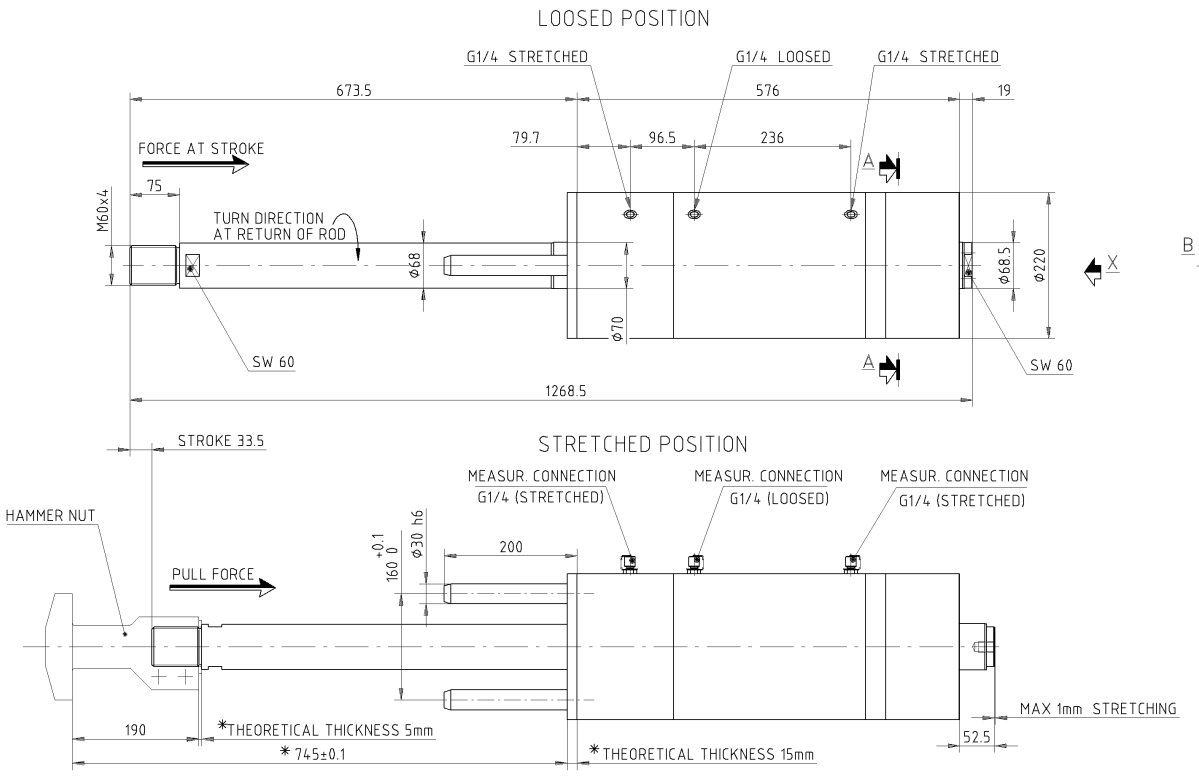

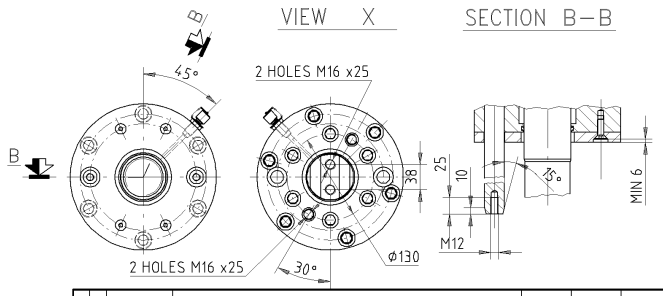

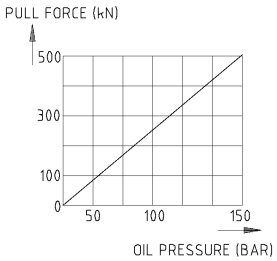

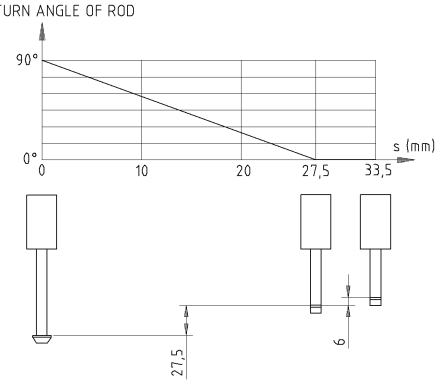

DIMENSIONS WITH "*" DETERMINE AFTER EXECUTION OF THE CYLINDER AND HAMMER NUT

TECHNICAL DATA :

CYLINDER FOR TURNING: Ø125 / Ø70 x 33,5
CYLINDER FOR STRETCHING: Ø125 /Ø70 x 60
FORCE AT STROKE: 125 kN (FOR 150 BAR)
PULLING FORCE: 505 kN (FOR 150 BAR)
HOLDING FORCE: 550 kN (WITHOUT PRESSURE)
STRETCH TOLERANCE: 2mm (±1 mm)
STROKE: 33.5 ±1 mm
TURN ANGLE: 90°

MANUFACTURER: CYTEC ZYLINDERTECHNIK OR EQUAL

Rev.	Date	Revisions description	Drawn	Checked	Approved
00	06.99	ISSUED FOR CONSTRUCTION	RONCONI	PITTARI	DRIGANI

Drw number | Revision

DANIELI UNITED

Danieli item (TPC) | Contractual item | Obtained from | Replaces | Shop drw number | Rev.

Job No. | No. of parts | Progr. No.

Pattern DB. | Pattern code | Unit 8.173629.P | Item 320

Material: FROM TRADE | Heat treatment

Classification / symbol | Mass (Kg) 150,– | J=mr² (Kg m²)

Title: LOCATING CYLINDER

Scale 15 | Format A 2

DANIELI drw number: 4.534476.N | Revision 00 | Nr. of sheets 1 | Sheet / Follow 1/–

According to law DANELI & C. SpA considers this document to be a company secret and therefore prohibits any person to reproduce it or make it known in whole or in part to other parties or to competitors without specific written authorization of DANELI's Management

File number: 4534476.N.DWG

COMPUTER AIDED DESIGN

SLR COP15989-1 DP00C8016411 D213 8.468555.M

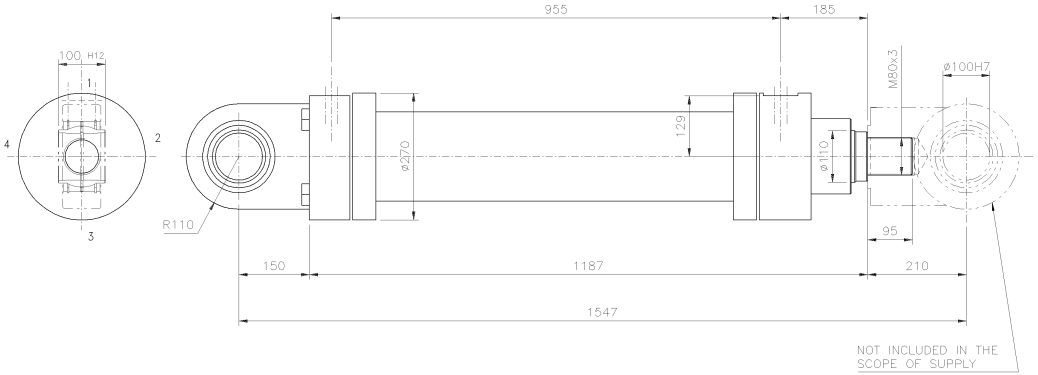

CILINDRO OLEODINAMICO – PRESSIONE NOMINALE 250 BAR SERIE ISO 6022
HYDRAULIC CYLINDER – NOMINAL PRESSURE 250 BAR SERIES ISO 6022

PRESSIONE DI SISTEMA: SYSTEM PRESSURE:	160 BAR	
PRESSIONE DI ESERCIZIO: OPERATING PRESSURE:	130 BAR	
ALESAGGIO: BORE:	160 mm	
DIAMETRO STELO: ROD DIAMETER:	110 mm	
CORSA: STROKE:	720 mm	
FLUIDO UTILIZZATO: OPERATING MEDIUM:	. .	HFD-QUINTOLUBRIC 822-220 HFD-QUINTOLUBRIC 822-220
ATTACCHI: CONNECTION:	4 BOLT-FLANGE SAE 3000 PSI – DN25	
CONSTRUTTORE:	PARKER	160/110-720 MP5 – MMA O EQUIVALENTE
MANUFACTURE:	PARKER	160/110-720 MP5 – MMA OR EQUAL

POSIZ. ATTACCHI: CONN. LOCATIONS:	AMMORTIZZAMENTO CUSHION	SFIATO ARIA VENTING	VALV.NON RITORNO CHECK VALVE	ATTACCO MANDATA DELIVERY CONN.	FINECORSA PROXIMITY SWITCH
LATO CULATTA BOTTOM SIDE	2	4	4	1	–
LATO STELO PISTON ROD SIDE	2	4	4	1	–

NOTE/REMARKS:
APPROVVIGIONAMENTO SECONDO NORMA DANIELI 2.8.011
PURCHASING AS DANIELI STANDARD 2.8.011

ACCESSORI/ACCESSORIES:

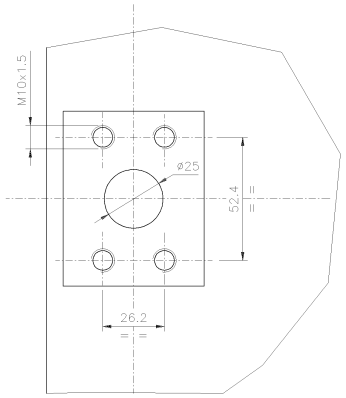

A (FOR FLANGE SAE 3000 DN25)

Rev.	Date	Revisions description	Drawn	Checked	Approved
01	05.07.04	REVISIONE GENERALE GENERAL REVISION	BOSIO	MELCHIOR	BORSI
00	05.07.00	EMESSO PER COSTRUZIONE ISSUED FOR CONSTRUCTION	MELCHIOR	VENTULIN	DRIGANI

DANIELI
WEAN UNITED

Danieli Item (TPC)
Contractual item
Obtained from
Replaces
Shop drw number | Rev.
Job No. | No. of parts | Progr. No.
Pattern DB. | Pattern code | Unit | Item
Material: DA COMMERCIO FROM TRADE | Heat treatment
Classification / symbol | Mass (Kg) 326+28 | J=m·r² (Kg m²)

Title
HYDRAULIC CYLINDER
CILINDRO IDRAULICO

Scale 1:5
Format A1
DANIELI drw number 4.582806.H | Revision 01 | Nr. of sheets 001 | Sheet 001

According to law DANIELI & C. SpA considers this document to be a company secret and therefore prohibits any person to reproduce it or make it known in whole or in part to other parties or to competitors without specific written authorization of DANIELI's Management

File name: 4582806_001.dwg

COPIS989-1 DP00C0016411 D259 8.468555.M

COMPUTER AIDED DESIGN

8.468555.M D259 DP00C0016411 COPIS989-1

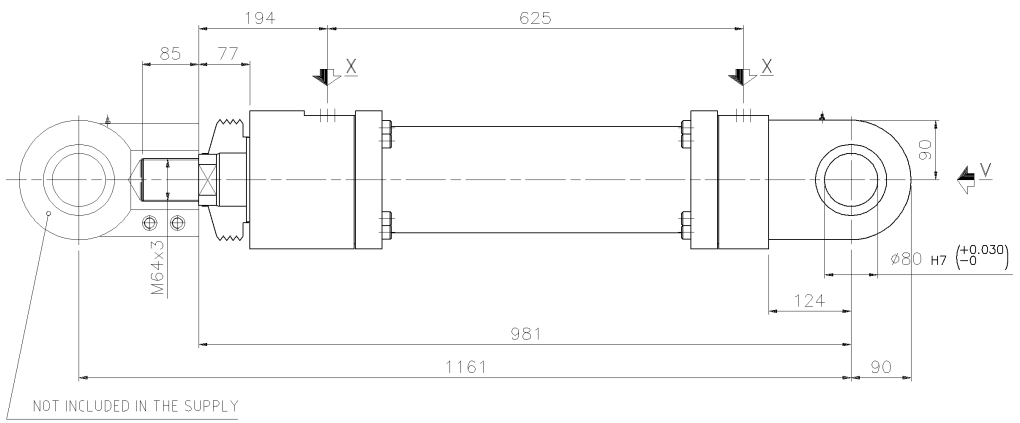

VISTA V
VIEW

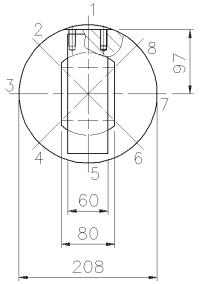

VISTA X
VIEW
Scale: 1:2

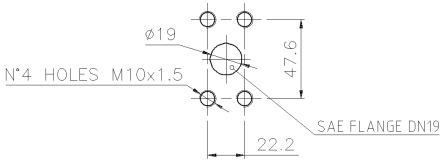

CILINDRO OLEODINAMICO SERVIZIO PESANTE – PRESSIONE NOMINALE 250 BAR
HYDRAULIC CYLINDER HEAVY DUTY – NOMINAL PRESSURE 250 BAR

PRESSIONE DI SISTEMA: SYSTEM PRESSURE:	200	BAR
PRESSIONE DI ESERCIZIO: OPERATING PRESSURE:	140	BAR
ALESAGGIO: BORE:	125	mm
DIAMETRO STELO: ROD DIAMETER:	80	mm
CORSA: STROKE:	420	mm

FLUIDO UTILIZZATO: QUINTOLUBRIC 822-220
OPERATING MEDIUM:

POSIZ. ATTACCHI: CONN. LOCATIONS:	AMMORTIZZAMENTO DAMPING	SFIATO ARIA VENTING	VALV.NON RITORNO CHECK VALVE	ATTACCO MANDATA DELIVERY CONN.
LATO CULATTA BOTTOM SIDE	7	3	6	1
LATO STELO PISTON ROD SIDE	7	3	6	1

NOTE/REMARKS:
APPROVIGIONAMENTO SECONDO NORMA DANIELI 2.8.011
PURCHASING AS PER DANIELI STANDARD 2.8.011
DIMENSIONI E TIPI SECONDO ISO 6022 E DIN 24333
DIMENSIONS & STYLES AS PER ISO 6022 & DIN 24333

HYDRAULIC CYLINDER TYPE MMA STYLE MP5
MANUFACTURE: PARKER OR EQUAL
SPECIAL ACCESSORIES: BELLOW ALLUMIZED FIBER GLASS FABRIC

Rev.	Date	Revisions description	Drawn	Checked	Approved
00	05.08.04	EMESSO PER COSTRUZIONE ISSUED FOR CONSTRUCTION	LEWANDR	MELCHIOR	SANDRIN

DANIELI
WEAN UNITED

Danieli item (TPC)
Contractual item
Obtained from 4.956278.M
Replaces
Shop drw number
Rev.

Job No.
No. of parts
Progr. No.
Pattern DB.
Pattern code
Unit 8.271603.X
Item 316
Material DAL COMMERCIO FROM TRADE
Heat treatment
Classification / symbol 02916
Mass (Kg) 142
J=m.r² (Kg m²)

Title
CILINDRO IDRAULICO
HYDRAULIC CYLINDER

Scale 1:5
Format A2
DANIELI drw number 4.827644.T
Revision 00
Nr. of sheets 001
Sheet 001

According to law DANIELI & C. SpA considers this document to be a company secret and therefore prohibits any person to reproduce it or make it known in whole or in part to other parties or to competitors without specific written authorization of DANIELI's Management

File number 4827644T.001.00

COMPUTER AIDED DESIGN

COP15989-1 DP00C8014041 J316 8.271603.X

COP15989-1 DP00C8014041 J316 8.271603.X

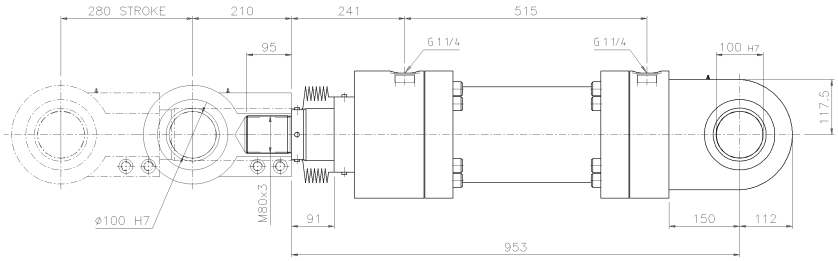

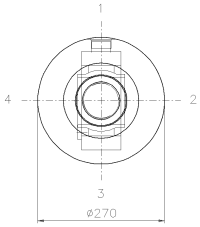

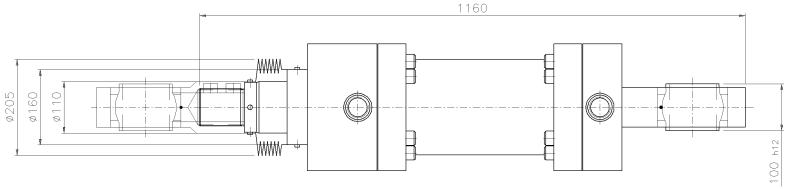

CILINDRO OLEODINAMICO SERVIZIO PESANTE – PRESSIONE NOMINALE 250 BAR
HYDRAULIC CYLINDER HEAVY DUTY – NOMINAL PRESSURE 250 BAR

PRESSIONE DI SISTEMA: SYSTEM PRESSURE:	160	BAR
PRESSIONE DI ESERCIZIO: OPERATING PRESSURE:	140	BAR
ALESAGGIO: BORE:	160	mm
DIAMETRO STELO: ROD DIAMETER:	110	mm
CORSA: STROKE:	280	mm

FLUIDO UTILIZZATO: OLIO MINERALE
OPERATING MEDIUM: MINERAL OIL

POSIZ. ATTACCHI: CONN. LOCATIONS:	AMMORTIZZAMENTO DAMPING	SFIATO ARIA VENTING	VALV.NON RITORNO CHECK VALVE	ATTACCO MANDATA DELIVERY CONN.
LATO CULATTA BOTTOM SIDE	4	3	2	1
LATO STELO PISTON ROD SIDE	4	3	2	1

NOTE/REMARKS:
APPROWIGIONAMENTO SECONDO NORMA DANIELI 2.8.011
PURCHASING AS PER DANIELI STANDARD 2.8.011

HYDRAULIC CYLINDER ø160/ø110x280 STROKE
SERIES: MMA
TYPE: MP5
MANUFACTURER: PARKER OR EQUAL

Rev.	Date	Revisions description	Drawn	Checked	Approved
00	24.02.04	EMESSO PER COSTRUZIONE ISSUED FOR CONSTRUCTION	BOREJKO	PAWŁOWSKI	ORKGANI

DANIELI
WEAN UNITED

Danieli Item (TPC)
Contractual item
Obtained from
Replaces
Shop drw number | Rev.

Job No. | No. of parts | Progr. No.

Pattern DB. | Pattern code | Unit 8.272006.N | Item 301

Material * FROM TRADE | Heat treatment

Classification / symbol 02912 | Mass (Kg) 253 | J=m.r² (Kg m²)

Title
CILINDRO IDRAULICO
HYDRAULIC CYLINDER

Scale 1:5 | Format A1

DANIELI drw number 4.828360.K | Revision 00 | Nr. of sheets | Sheet 001

According to law DANIELI & C. SpA considers this document to be a company secret and therefore prohibits any person to reproduce it or make it known in whole or in part to other parties or to competitors without specific written authorization of DANIELI's Management

File name: 4.828360.K

COPT5989-1 DP00G8016411 D283 8.468555.M

COMPUTER AIDED DESIGN

8.468555.M D283 DP00G8016411 COPT5989-1

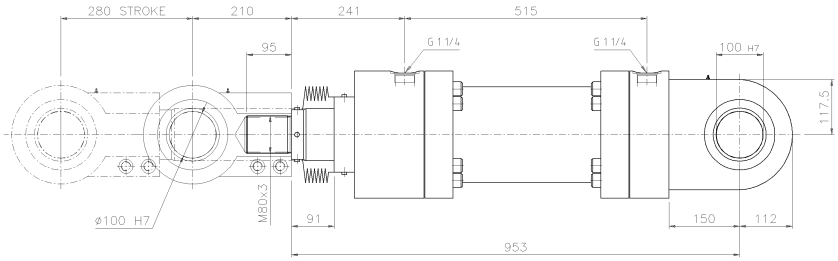

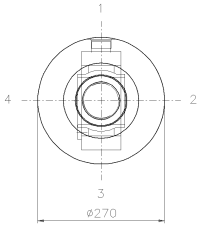

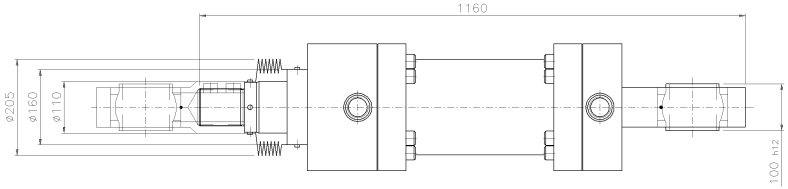

CILINDRO OLEODINAMICO SERVIZIO PESANTE – PRESSIONE NOMINALE 250 BAR
HYDRAULIC CYLINDER HEAVY DUTY – NOMINAL PRESSURE 250 BAR

PRESSIONE DI SISTEMA: SYSTEM PRESSURE:	160	BAR
PRESSIONE DI ESERCIZIO: OPERATING PRESSURE:	140	BAR
ALESAGGIO: BORE:	160	mm
DIAMETRO STELO: ROD DIAMETER:	110	mm
CORSA: STROKE:	280	mm

FLUIDO UTILIZZATO: OLIO MINERALE
OPERATING MEDIUM: MINERAL OIL

POSIZ. ATTACCHI: CONN. LOCATIONS:	AMMORTIZZAMENTO DAMPING	SFIATO ARIA VENTING	VALV.NON RITORNO CHECK VALVE	ATTACCO MANDATA DELIVERY CONN.
LATO CULATTA BOTTOM SIDE	4	3	2	1
LATO STELO PISTON ROD SIDE	4	3	2	1

NOTE/REMARKS:
APPROWIGIONAMENTO SECONDO NORMA DANIELI 2.8.011
PURCHASING AS PER DANIELI STANDARD 2.8.011

HYDRAULIC CYLINDER ø160/ø110x280 STROKE
SERIES: MMA
TYPE: MP5
MANUFACTURER: PARKER OR EQUAL

Rev.	Date	Revisions description	Drawn	Checked	Approved
00	24.02.04	EMESSO PER COSTRUZIONE ISSUED FOR CONSTRUCTION	BOREJKO	PAWŁOWSKI	ORKGANI

DANIELI
WEAN UNITED

Danieli Item (TPC)
Contractual item
Obtained from
Replaces
Shop drw number | Rev.

Job No. | No. of parts | Progr. No.

Pattern DB. | Pattern code | Unit 8.272006.N | Item 301

Material * FROM TRADE | Heat treatment

Classification / symbol 02912 | Mass (Kg) 253 | J=m.r² (Kg m²)

Title
CILINDRO IDRAULICO
HYDRAULIC CYLINDER

Scale 1:5 | Format A1

DANIELI drw number 4.828360.K | Revision 00 | Nr. of sheets | Sheet 001

According to law DANIELI & C. SpA considers this document to be a company secret and therefore prohibits any person to reproduce it or make it known in whole or in part to other parties or to competitors without specific written authorization of DANIELI's Management

File name: 4.828360.K

COPT5989-1 DP00G8016411 D283 8.468555.M

COMPUTER AIDED DESIGN

8.468555.M D283 DP00G8016411 COPT5989-1

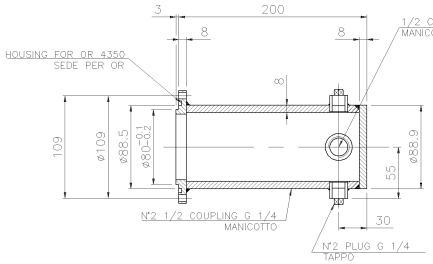

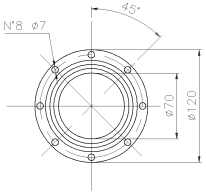

DETAIL OF LINEAR TRANSDUCER GUARD
PART. PROTEZIONE PER TRASDUTTORE LINEARE
PROTECTION – PROTEZIONE IP67
SCALA/Scale 1:2.5

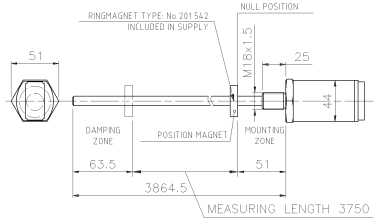

DETTAGLIO TRASDUTTORE LINEARE TEMPOSONIC
DETAIL OF LINEAR TRANSDUCER TEMPOSONIC
SCALA/Scale 1:2.5

CILINDRO OLEODINAMICO SERVIZIO PESANTE – PRESSIONE NOMINALE 250 BAR
HYDRAULIC CYLINDER HEAVY DUTY – NOMINAL PRESSURE 250 BAR

PRESSIONE DI SISTEMA: SYSTEM PRESSURE:	160	BAR
PRESSIONE DI ESERCIZIO: OPERATING PRESSURE:	140	BAR
ALESAGGIO: BORE:	125	mm
DIAMETRO STELO: ROD DIAMETER:	90	mm
CORSA: STROKE:	3700	mm *

FLUIDO UTILIZZATO: QUINTOLUBRIC 822-220
OPERATING MEDIUM:

POSIZ. ATTACCHI: CONN. LOCATIONS:	AMMORTIZZAMENTO DAMPING	SFIATO ARIA VENTING	VALV.NON RITORNO CHECK VALVE	ATTACCO MANDATA DELIVERY CONN.
LATO CULATTA BOTTOM SIDE	4	3	2	1
LATO STELO PISTON ROD SIDE	4	3	2	1

NOTE/REMARKS:
APPROWIGIONAMENTO SECONDO NORMA DANIELI 2.8.011
PURCHASING AS PER DANIELI STANDARD 2.8.011

* TUBO LIMITATORE LUNGHEZZA=400mm
STOP TUBE LENGTH=400mm

HYDRAULIC CYLINDER ø125xø90x3700 STROKE
TYPE: CDH2
TYPE: MS2
FA: REXROTH OR EQUAL

VERSIONI / VERSIONS	
4.828361.F/002	HYDRAULIC CYLINDER WITH PROVISION FOR LINEAR TRANSDUCER "TEMPOSONIC III" MOD. RH-M-3750M-D70-1-S1G11 AND RELEVANT MAGNET. MAGNET INCLUDED IN THE SCOPE OF SUPPLY TRANSDUCER NOT INCLUDED IN THE SCOPE OF SUPPLY
4.828361.F/001	HYDRAULIC CYLINDER SUPPLIED WITH LINEAR TRANSDUCER "TEMPOSONIC III" MOD. RH-M-3750M-D70-1-S1G11; RELEVANT MAGNET AND CONNECTOR. TRANSDUCER, MAGNET AND CABLE (LENGHT 10m) WITH CONNECTOR ALREADY INSTALLED AND TESTED. (CONNECTOR: TYPE 7 POLES – MTS-ST C09131D07)

Rev.	Date	Revisions description	Drawn	Checked	Approved
D1	20.06.05	REVISIONE GENERALE GENERAL REVISIN	BOSIO	MELCHIOR	SANDRIN
00	12.05.05	EMESSO PER COSTRUZIONE ISSUED FOR CONSTRUCTION	BOREJKO	PAWŁOWSKI	MELCHIOR

DANIELI
WEAN UNITED

Danieli Item (TPC)
Contractual item
Obtained from
Replaces
Shop drw number | Rev.

Job No. | No. of parts | Progr. No.

Pattern DB. | Pattern code | Unit 8.272007.P | Item 301

Material: DA COMMERCIO FROM TRADE | Heat treatment

Classification / symbol: 02916 | Mass (Kg): 4.83 | J=m·r² (Kg m²)

Title: HYDRAULIC CYLINDER

Scale 1:5 | Format A1

DANIELI drw number: 4.828361.F | Revision 01 | Nr. of sheets 1 | Sheet 001

According to law DANIELI & C. SpA considers this document to be a company secret and therefore prohibits any person to reproduce it or make it known in whole or in part to other parties or to competitors without specific written authorization of DANIELI's Management

File name: 4.828361.F_002_001

COMPUTER AIDED DESIGN

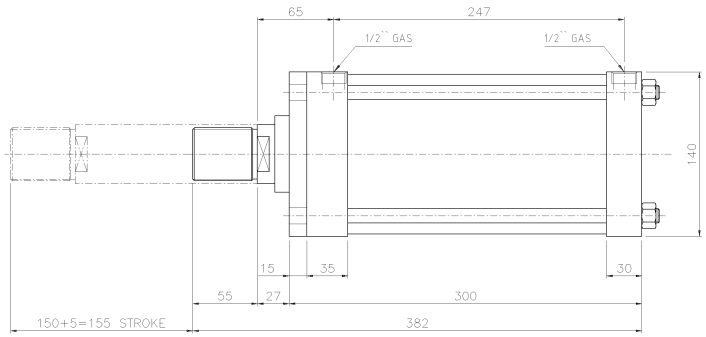

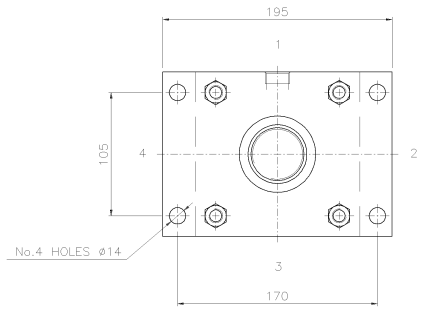

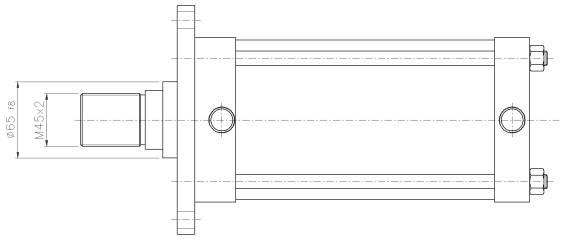

PNEUMATIC CYLINDER ø125xø50x155 STROKE
SERIES: HEAVY DUTY–12 Atm
TYPE: A
FA: FOSSA OR EQUAL

PNEUMATIC CYLINDER HEAVY DUTY MILL TYPE – NOMINAL PRESSURE 14 BAR

PRESSIONE DI ESERCIZIO: OPERATING PRESSURE:	4	BAR
ALESAGGIO: BORE:	125	mm
DIAMETRO STELO: ROD DIAMETER:	50	mm
CORSA: STROKE:	155	mm

POSIZ. ATTACCHI: CONN. LOCATIONS:	AMMORTIZZAMENTO CUSHION	VALV.NON RITORNO CHECK VALVE	ATTACCO MANDATA DELIVERY CONN.
LATO CULATTA BOTTOM SIDE	3	2	1
LATO STELO PISTON ROD SIDE	3	2	1

NOTE/REMARKS:
APPROVVIGIONAMENTO SECONDO NORMA DANIELI 2.8.012
PURCHASING AS PER DANIELI STANDARD 2.8.012

ACCESSORI/ACCESSORIES:

FORNITORE/SUPPLIER:
"FOSSA" O EQUIV. –OR EQUAL

COMPUTER AIDED DESIGN

Rev.	Date	Revisions description	Drawn	Checked	Approved
00	10.05.05	EMESSO PER COSTRUZIONE ISSUED FOR CONSTRUCTION	BOREJKO	PAWŁOWSKI	ORIGANI

DANIELI
WEAN UNITED

Danieli Item (TPC)
Contractual item
Obtained from
Replaces
Shop drw number | Rev.

Job No. | No. of parts | Progr. No.
Pattern DB. | Pattern code | Unit 8.272007.P | Item 302
Material | Heat treatment
Classification / symbol | Mass (Kg) 28 | J=m·r² (Kg m²)

Title
PNEUMATIC CYLINDER

Scale 1:2
Format A1
DANIELI drw number 4.828362.G
Revision 00
Nr. of sheets 001
Sheet 001

According to law DANIELI & C. SpA considers this document to be a company secret and therefore prohibits any person to reproduce it or make it known in whole or in part to other parties or to competitors without specific written authorization of DANIELI's Management.

File name: 4828362_00.dwg

CQF15989-1 DP00G0014036 D302 8.272007.P

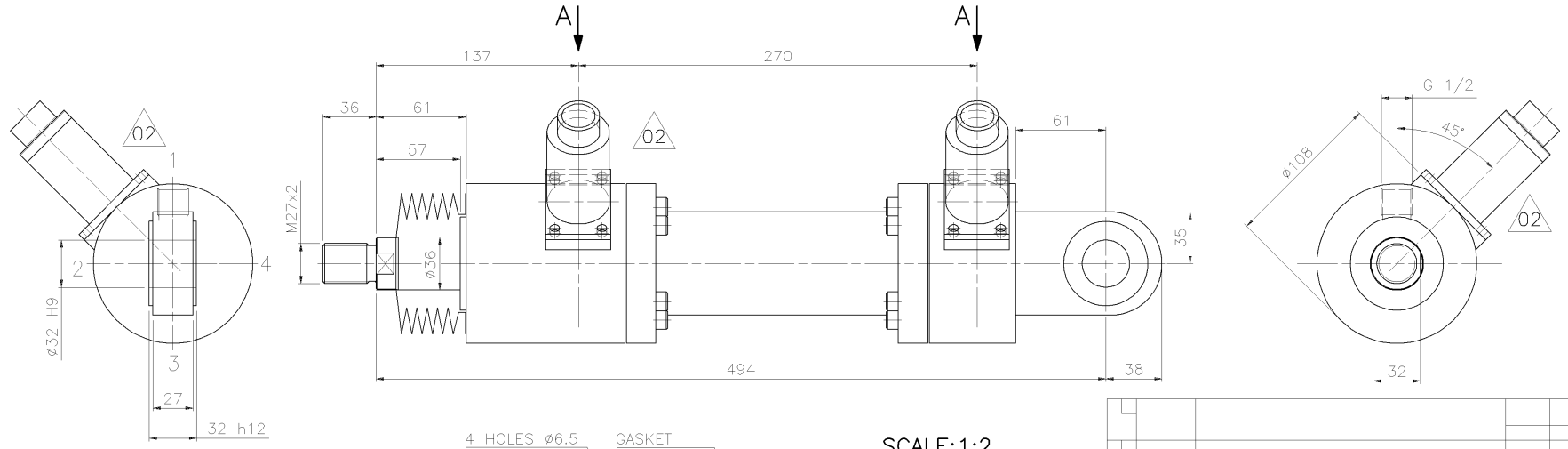

HYDRAULIC CYLINDER ø56/ø36x150
SERIES: MMA
TYPE: MP 3
MANUFACTURE: PARKER OR EQUAL

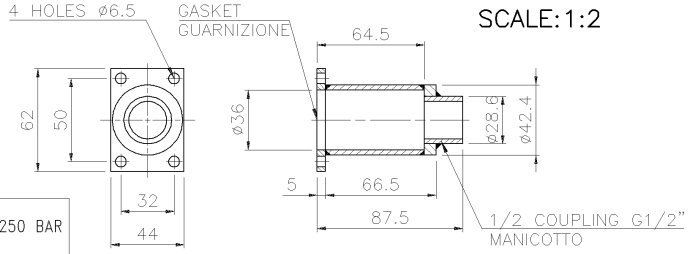

SCALE:1:2

A (1:2)

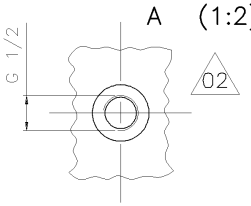

CILINDRO OLEODINAMICO SERVIZIO PESANTE – PRESSIONE NOMINALE 250 BAR
HYDRAULIC CYLINDER HEAVY DUTY – NOMINAL PRESSURE 250 BAR

PRESSIONE DI SISTEMA: SYSTEM PRESSURE:	160	BAR
PRESSIONE DI ESERCIZIO: OPERATING PRESSURE:	140	BAR
ALESAGGIO: BORE:	50	mm
DIAMETRO STELO: ROD DIAMETER:	36	mm
CORSA: STROKE:	150	mm

FLUIDO UTILIZZATO: QUINTOLUBRIC 822-220
OPERATING MEDIUM:

POSIZ. ATTACCHI: CONN. LOCATIONS:	AMMORTIZZAMENTO DAMPING	SFIATO ARIA VENTING	VALV.NON RITORNO CHECK VALVE	ATTACCO MANDATA DELIVERY CONN.
LATO CULATTA BOTTOM SIDE	4	3	3	1
LATO STELO PISTON ROD SIDE	4	3	3	1

02

NOTE/REMARKS:
DIMENSIONS & STYLES AS PER ISO 6022 & DIN 24333
PURCHASE & INSPECTION AS PER DANIELI STANDARD 2.8.011

VERSIONI / VERSIONS

4.828365.C/002	N°2 LIMIT SWITCHES "BALLUFF" OR EQUAL CODE: BES-516-300-S***-D-PU PNP-24V 3 WIRES WITH 5m CABLE CON 5m DI CAVO * SIZE OF LIMIT SWITCHES SHOULD BE DEFINED BY CYLINDER SUPPLIER AND COMUNICATED TO DANIELI-TO FORESEE M12x1 FOR EACH LIMIT SWITCH MOUNTING-LIMIT SWITCHES ARE INCLUDED IN CYLINDER SCOPE OF SUPPLY
4.828365.C/001	N°2 LIMIT SWITCHES "BALLUFF" OR EQUAL CODE: BES-516-300-S***-S4-D PNP-24V 3 WIRES CONNECTOR STYLE * SIZE OF LIMIT SWITCHES SHOULD BE DEFINED BY CYLINDER SUPPLIER AND COMUNICATED TO DANIELI-TO FORESEE M12x1 FOR EACH LIMIT SWITCH MOUNTING-LIMIT SWITCHES ARE INCLUDED IN CYLINDER SCOPE OF SUPPLY

Rev.	Date	Revisions description	Drawn	Checked	Approved
02	29.08.05	MODIFICATO DOVE INDICATO CON 02 MODIFIED WHERE INDICATED WITH	BOSIO	MELCHIOR	SANDRIN
01	17.03.05	DRAWING MODIFIED	BOSIO	MELCHIOR	SANDRIN
00	26.02.04	EMESSO PER COSTRUZIONE ISSUED FOR CONSTRUCTION	BOREJKO	PAWLOWSKI	MELCHIOR

DANIELI
WEAN UNITED

Danieli item (TPC)
Contractual item
Obtained from
Replaces
Shop drw number
Rev.

Job No.
No. of parts
Progr. No.
Pattern DB.
Pattern code
Unit 8.271023.D
Item 302
Material DAL COMMERCIO FROM TRADE
Heat treatment
Classification / symbol 02916
Mass (Kg) 19.5
J=m.r² (Kg m²)

Title
CYLINDRO IDRAULICO
HYDRAULIC CYLINDER

Scale 1:2.5
Format A2
Nr. of sheets 001
Sheet 001

DANIELI drw number 4.828365.C
Revision 02

According to law DANIELI & C. SpA considers this document to be a company secret and therefore prohibits any person to reproduce it or make it known in whole or in part to other parties or to competitors without specific written authorization of DANIELI's Management

File number 4828365C_001_02

COMPUTER AIDED DESIGN

COP15989-1 DP00C8016411 D285 8.468555.M

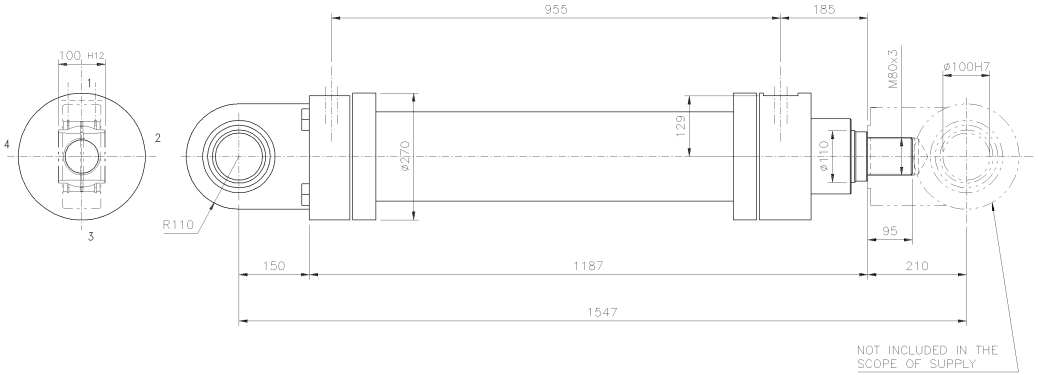

CILINDRO OLEODINAMICO – PRESSIONE NOMINALE 250 BAR SERIE ISO 6022
HYDRAULIC CYLINDER – NOMINAL PRESSURE 250 BAR SERIES ISO 6022

PRESSIONE DI SISTEMA: SYSTEM PRESSURE:	160 BAR	
PRESSIONE DI ESERCIZIO: OPERATING PRESSURE:	130 BAR	
ALESAGGIO: BORE:	160 mm	
DIAMETRO STELO: ROD DIAMETER:	110 mm	
CORSA: STROKE:	720 mm	
FLUIDO UTILIZZATO: OPERATING MEDIUM:	. .	HFD-QUINTOLUBRIC 822-220 HFD-QUINTOLUBRIC 822-220
ATTACCHI: CONNECTION:	4 BOLT-FLANGE SAE 3000 PSI – DN25	
CONSTRUTTORE:	PARKER	160/110-720 MP5 – MMA O EQUIVALENTE
MANUFACTURE:	PARKER	160/110-720 MP5 – MMA OR EQUAL

POSIZ. ATTACCHI: CONN. LOCATIONS:	AMMORTIZZAMENTO CUSHION	SFIATO ARIA VENTING	VALV.NON RITORNO CHECK VALVE	ATTACCO MANDATA DELIVERY CONN.	FINECORSA PROXIMITY SWITCH
LATO CULATTA BOTTOM SIDE	2	4	4	1	–
LATO STELO PISTON ROD SIDE	2	4	4	1	–

NOTE/REMARKS:
APPROVVIGIONAMENTO SECONDO NORMA DANIELI 2.8.011
PURCHASING AS DANIELI STANDARD 2.8.011

ACCESSORI/ACCESSORIES:

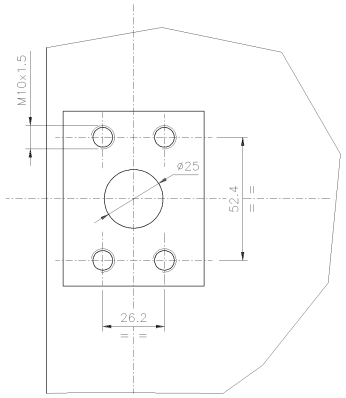

A (FOR FLANGE SAE 3000 DN25)

Rev.	Date	Revisions description	Drawn	Checked	Approved
01	05.07.04	REVISIONE GENERALE GENERAL REVISION	BOSIO	MELCHIOR	BORSI
00	05.07.00	EMESSO PER COSTRUZIONE ISSUED FOR CONSTRUCTION	MELCHIOR	VENTULIN	DRIGANI

DANIELI
WEAN UNITED

Danieli Item (TPC)
Contractual item
Obtained from
Replaces
Shop drw number | Rev.
Job No. | No. of parts | Progr. No.
Pattern DB. | Pattern code | Unit | Item
Material: DA COMMERCIO FROM TRADE | Heat treatment
Classification / symbol | Mass (Kg) 326+28 | J=m·r² (Kg m²)

Title
HYDRAULIC CYLINDER
CILINDRO IDRAULICO

Scale 1:5
Format A1
DANIELI drw number 4.582806.H | Revision 01 | Nr. of sheets 001 | Sheet 001

According to law DANIELI & C. SpA considers this document to be a company secret and therefore prohibits any person to reproduce it or make it known in whole or in part to other parties or to competitors without specific written authorization of DANIELI's Management

File name: 4582806_001.dwg

COPIS989-1 DP00C0016411 D259 8.468555.M

COMPUTER AIDED DESIGN

8.468555.M D259 DP00C0016411 COPIS989-1

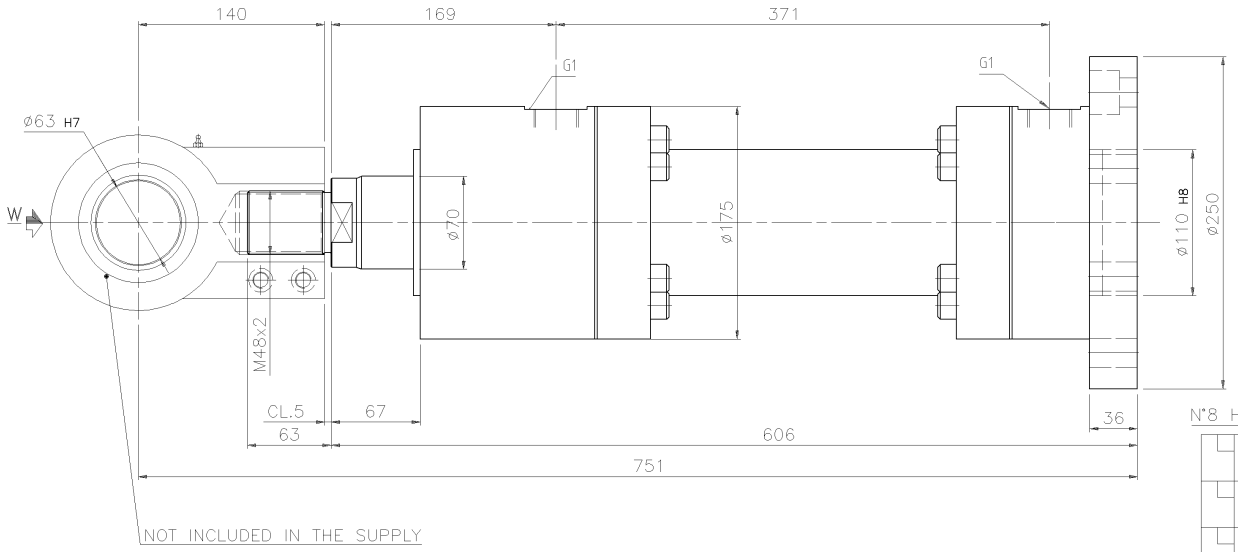

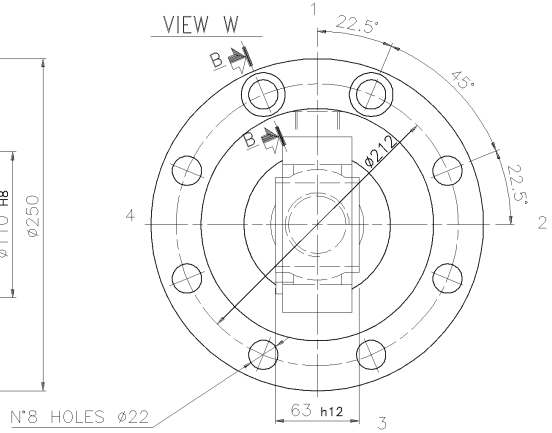

Rev.	Date	Revisions description	Drawn	Checked	Approved
00	08.06.05	EMESSO PER COSTRUZIONE ISSUED FOR CONSTRUCTION	Bressan	BORLINI	SANDRIN

CILINDRO OLEODINAMICO SERVIZIO PESANTE – PRESSIONE NOMINALE 250 BAR
HYDRAULIC CYLINDER HEAVY DUTY – NOMINAL PRESSURE 250 BAR

PRESSIONE DI SISTEMA: SYSTEM PRESSURE:	250	BAR
PRESSIONE DI ESERCIZIO: OPERATING PRESSURE:	140	BAR
ALESAGGIO: BORE:	100	mm
DIAMETRO STELO: ROD DIAMETER:	70	mm
CORSA: STROKE:	200	mm

FLUIDO UTILIZZATO: HFD-QUINTOLUBRIC 822-220
OPERATING MEDIUM:

POSIZ. ATTACCHI: CONN. LOCATIONS:	AMMORTIZZAMENTO DAMPING	SFIATO ARIA VENTING	VALV.NON RITORNO CHECK VALVE	ATTACCO MANDATA DELIVERY CONN.
LATO CULATTA BOTTOM SIDE	2	4	3	1
LATO STELO PISTON ROD SIDE	2	4	3	1

NOTE/REMARKS:
APPROWIGIONAMENTO SECONDO NORMA DANIELI 2.8.011
PURCHASING AS PER DANIELI STANDARD 2.8.011
DIMENSIONI E TIPI SECONDO ISO 6022 E DIN 24333
DIMENSIONS & STYLES AS PER ISO 6022 & DIN 24333

SEZIONE B–B
SECTION

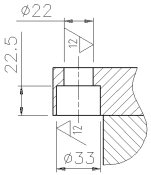

HYDRAULIC CYLINDER TYPE MMA STYLE MF4
ROUND FLANGE MOUNTINGS
MANUFACTURE: PARKER OR EQUAL

DANIELI
WEAN UNITED

Danieli item (TPC)
Contractual item
Obtained from 4.952701.A
Replaces
Shop drw number
Rev.

Job No.
No. of parts
Progr. No.

Pattern DB.
Pattern code
Unit 8.272153.M
Item 301

Material DAL COMMERCIO FROM TRADE
Heat treatment

Classification / symbol 02916
Mass (Kg) 80
J=m.r² (Kg m²)

Title
CYLINDRO IDRAULICO
HYDRAULIC CYLINDER

Scale 1:2.5
Format A2

DANIELI drw number 4.830850.D
Revision 00
Nr. of sheets 1
Sheet 001

According to law DANIELI & C. SpA considers this document to be a company secret and therefore prohibits any person to reproduce it or make it known in whole or in part to other parties or to competitors without specific written authorization of DANIELI's Management

File number 48308500

COMPUTER AIDED DESIGN

8.272153.M F301 DP00G8014501 COP15989-1

COP15989-1 DP00G8014501 F301 8.272153.M

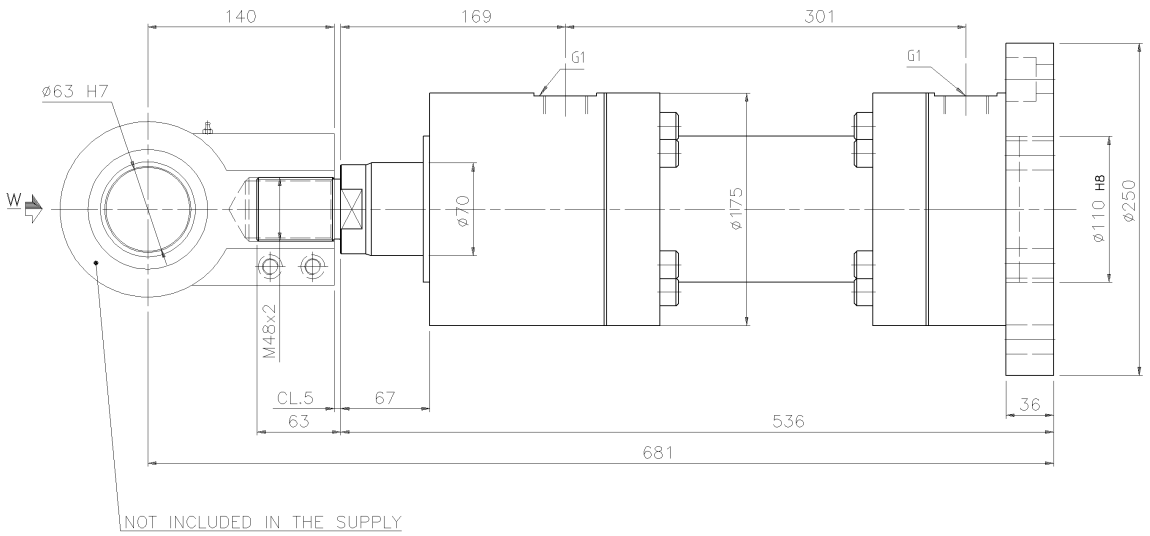

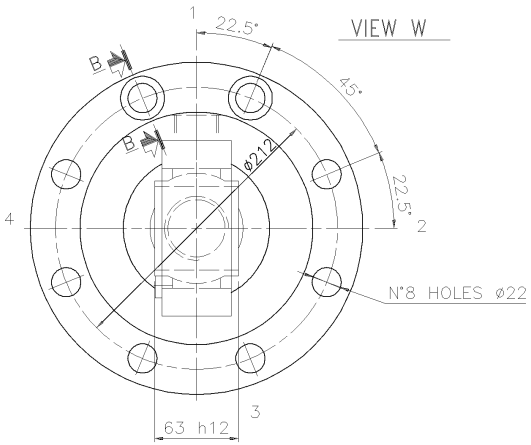

CILINDRO OLEODINAMICO SERVIZIO PESANTE – PRESSIONE NOMINALE 250 BAR
HYDRAULIC CYLINDER HEAVY DUTY – NOMINAL PRESSURE 250 BAR

PRESSIONE DI SISTEMA: SYSTEM PRESSURE:	250	BAR
PRESSIONE DI ESERCIZIO: OPERATING PRESSURE:	140	BAR
ALESAGGIO: BORE:	100	mm
DIAMETRO STELO: ROD DIAMETER:	70	mm
CORSA: STROKE:	130	mm

FLUIDO UTILIZZATO: OPERATING MEDIUM: HFD-QUINTOLUBRIC 822-220

POSIZ. ATTACCHI: CONN. LOCATIONS:	AMMORTIZZAMENTO DAMPING	SFIATO ARIA VENTING	VALV.NON RITORNO CHECK VALVE	ATTACCO MANDATA DELIVERY CONN.
LATO CULATTA BOTTOM SIDE	2	4	3	1
LATO STELO PISTON ROD SIDE	2	4	3	1

NOTE/REMARKS:
APPROWIGIONAMENTO SECONDO NORMA DANIELI 2.8.011
PURCHASING AS PER DANIELI STANDARD 2.8.011
DIMENSIONI E TIPI SECONDO ISO 6022 E DIN 24333
DIMENSIONS & STYLES AS PER ISO 6022 & DIN 24333

SEZIONE B–B
SECTION

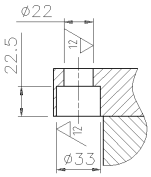

HYDRAULIC CYLINDER TYPE MMA STYLE MF4
ROUND FLANGE MOUNTINGS
MANUFACTURE: PARKER OR EQUAL

Rev.	Date	Revisions description	Drawn	Checked	Approved
00	08.06.05	EMESSO PER COSTRUZIONE ISSUED FOR CONSTRUCTION	Bressan	BORLINI	SANDRIN

DANIELI
WEAN UNITED

Danieli item (TPC)
Contractual item
Obtained from 4.996580.K
Replaces
Shop drw number
Rev.

Job No.
No. of parts
Progr. No.
Pattern DB.
Pattern code
Unit 8.272153.M
Item 302
Material DAL COMMERCIO FROM TRADE
Heat treatment
Classification / symbol 02916
Mass (Kg) 76
J=m.r² (Kg m²)

Title
CYLINDRO IDRAULICO
HYDRAULIC CYLINDER

Scale 1:2.5
Format A2
DANIELI drw number 4.830851.S
Revision 00
Nr. of sheets 1
Sheet 001

According to law DANIELI & C. SpA considers this document to be a company secret and therefore prohibits any person to reproduce it or make it known in whole or in part to other parties or to competitors without specific written authorization of DANIELI's Management

File number 4830851S

COMPUTER AIDED DESIGN

COP15989-1 DP00G8014501 F302 8.272153.M

COP15989-1 DP00G8014501 F302 8.272153.M

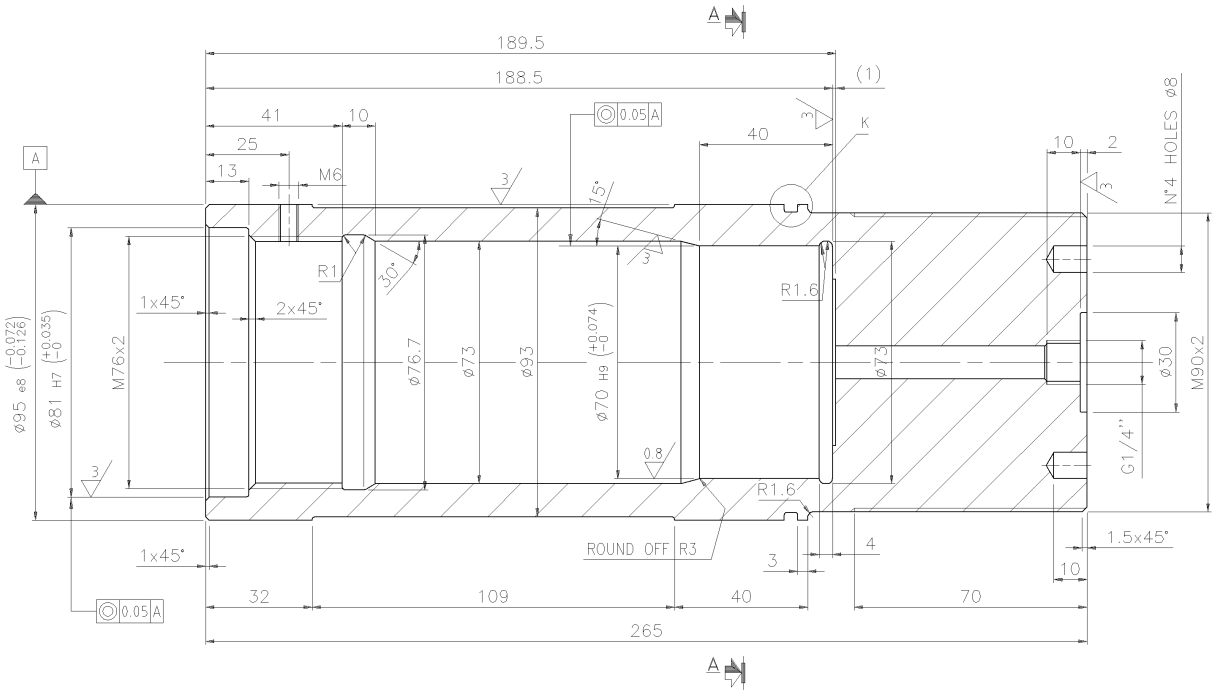

PARTICOLARE K
DETAIL
Scale: 2:1

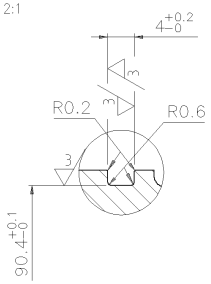

SEZIONE A–A
SECTION

VISTA W
VIEW

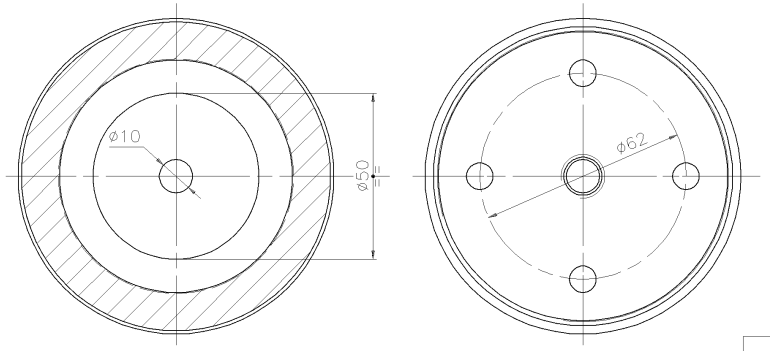

"NITREG" TREATMENT
ON ALL SURFACES
HARDNESS: 600÷700 HV1
DEPTH: 0.2÷0.3 mm

Rev.	Date	Revisions description	Drawn	Checked	Approved
00	16.06.03	EMESSO PER COSTRUZIONE ISSUED FOR CONSTRUCTION	KANIA	GALLI	DRIGANI

DANIELI
WEAN UNITED

Danieli item (TPC)
Contractual item
Obtained from 4.531997.E
Replaces
Shop drw number | Rev.

Job No. | No. of parts | Progr. No.

Pattern DB. | Pattern code | Unit 8.271208.B | Item 301

Material 36CrNiMo4+HH EN10083-1 | Heat treatment BONIFICA HARD. & TEMP. 280÷310 HB + NOTE

Classification / symbol 40661 | Mass (Kg) 7.9 | J=m.r² (Kg m²)

Title
CAMICIA PER CILINDRO
CYLINDER LINEAR

Scale 1:1
Format A2
Nr. of sheets 1
Sheet 001

DANIELI drw number 4.947981.N
Revision 00

According to law DANIELI & C. SpA considers this document to be a company secret and therefore prohibits any person to reproduce it or make it known in whole or in part to other parties or to competitors without specific written authorization of DANIELI's Management

File number 4947981N

12 / 6 / 3 / 1.6 / 0.4

TOLLERANZE GENERALI DI LAVORAZIONE
Scostamenti per quote senza tolleranza secondo norma N° 2.4.103

SMUSSO SPIGOLI NON QUOTATI= 1 X45°
Unquoted bevel...
RAGGI NON QUOTATI R= 0.8
Unquoted radius...

GENERAL MACHINING TOLERANCES
Deviations for dimension without tolerances to spec. n° 2.4.103

COMPUTER AIDED DESIGN

COP15989-1 DP00G8016024 C301 8.271208.B

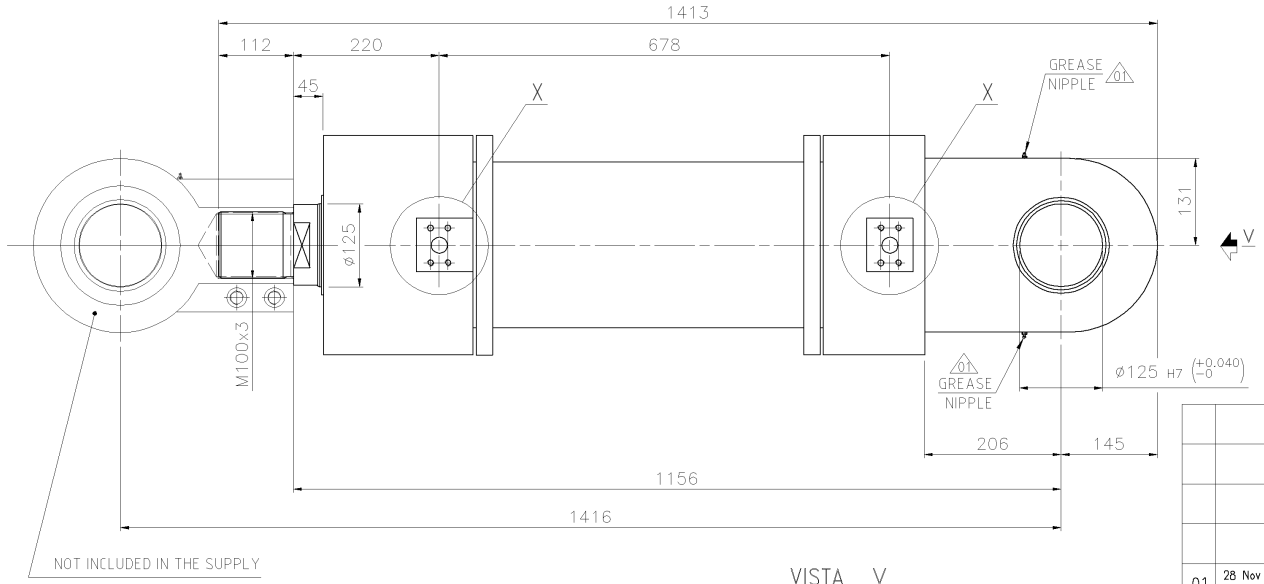

DETTAGLIO X
DETAIL
Scale: 1:2

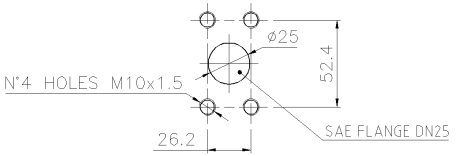

VISTA V
VIEW

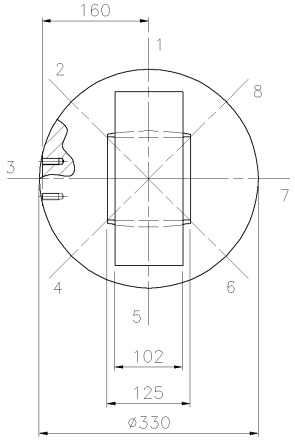

CILINDRO OLEODINAMICO SERVIZIO PESANTE – PRESSIONE NOMINALE 250 BAR
HYDRAULIC CYLINDER HEAVY DUTY – NOMINAL PRESSURE 250 BAR

PRESSIONE DI SISTEMA: SYSTEM PRESSURE:	200	BAR
PRESSIONE DI ESERCIZIO: OPERATING PRESSURE:	140	BAR
ALESAGGIO: BORE:	200	mm
DIAMETRO STELO: ROD DIAMETER:	125	mm
CORSA: STROKE:	400	mm

FLUIDO UTILIZZATO: OLIO MINERALE
OPERATING MEDIUM: MINERAL OIL

POSIZ. ATTACCHI: CONN. LOCATIONS:	AMMORTIZZAMENTO DAMPING	SFIATO ARIA VENTING	VALV.NON RITORNO CHECK VALVE	ATTACCO MANDATA DELIVERY CONN.
LATO CULATTA BOTTOM SIDE	1	7	8	3
LATO STELO PISTON ROD SIDE	1	7	8	3

NOTE/REMARKS:
APPROWIGIONAMENTO SECONDO NORMA DANIELI 2.8.011
PURCHASING AS PER DANIELI STANDARD 2.8.011
DIMENSIONI E TIPI SECONDO ISO 6022 E DIN 24333
DIMENSIONS & STYLES AS PER ISO 6022 & DIN 24333

MANUFACTURE: PARKER OR EQUAL
HYDRAULIC CYLINDER TYPE MMA STYLE MP5

Rev.	Date	Revisions description	Drawn by	Checked by	Approved by
01	28 Nov 2005	AGGIORNATO DOVE INDICATO CON 01 / UPDATED WHERE INDICATED WITH	Bressan	Borlini	Sandrin
00	29 Apr 2003	EMESSO PER COSTRUZIONE / ISSUED FOR CONSTRUCTION	Kania	Galli	Drigani

Material 1 (where not indicated on drawing): MAT.L FROM TRADE As per Supplier — State of supply Mat.1: Danieli Supply Std. — Supply Class — Pattern DB
Material 2 — State of supply Mat.2: Danieli Supply Std. — Supply Class — Casting Code
Material 3 — State of supply Mat.3: Danieli Supply Std. — Supply Class
Heat Treatment: On Drawing Symbol, if required.
Coating: On Drawing Symbol, if required.
Unquoted radius (mm) | Unquoted bevels (mm) | Dimensions without tolerance as per | Machinings | Max. Welding Class
Project Name

DANIELI WEAN UNITED

Job nr: Obtained from 4.534777.R
Replaces
Family code/Machine code: 02916
Weight (Kg): 465
J (Kgm²)

Title: CILINDRO IDRAULICO / HYDRAULIC CYLINDER
DANIELI Shop number: 4.950753.P — Revision: 01
DANIELI dwg number — Revision
Scale: 1:5
Format: A2
Nr. of sheets: 001
Sheet: 001 — Follow

According to law DANIELI & C. SpA considers this document to be a company secret and therefore prohibits any person to reproduce or disclose it or make it known in whole or in part to other parties or to competitors without specific written authorization of DANIELI's Management

File nr 40F075750_001 — COP15989-1 — DP00C8016411 — D407 — 8.468555.M

COMPUTER AIDED DESIGN –A

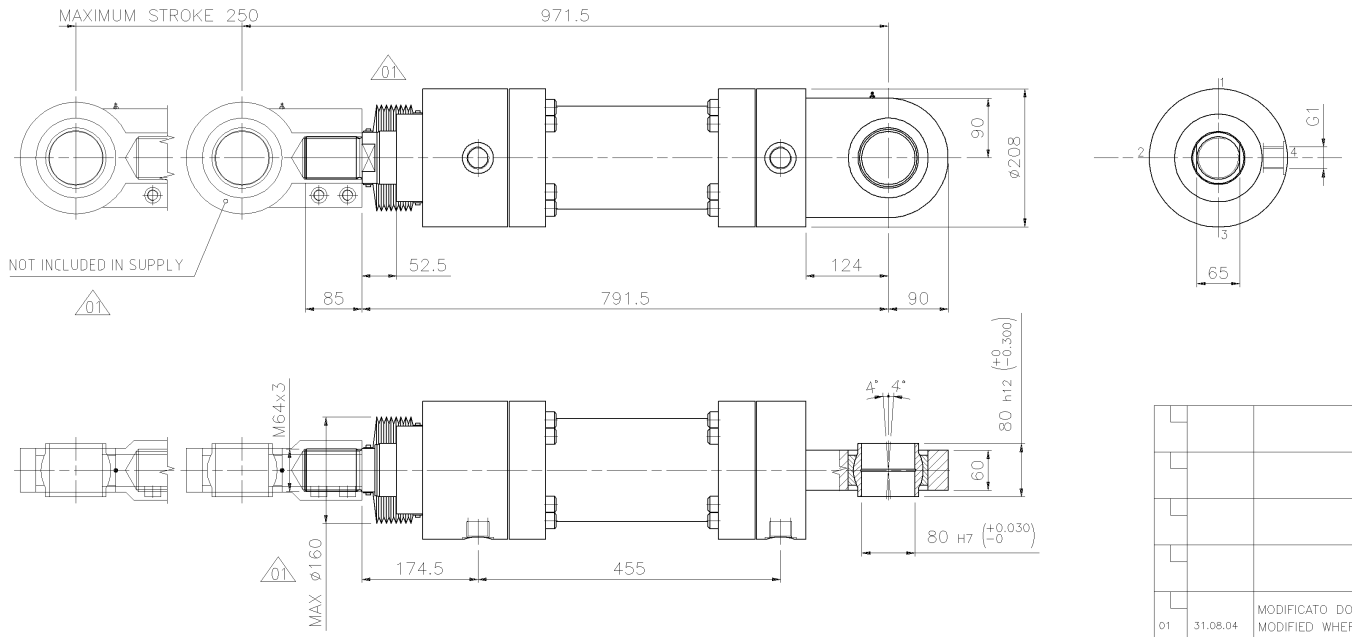

CILINDRO OLEODINAMICO SERVIZIO PESANTE – PRESSIONE NOMINALE 250 BAR
HYDRAULIC CYLINDER HEAVY DUTY – NOMINAL PRESSURE 250 BAR

PRESSIONE DI SISTEMA: / SYSTEM PRESSURE:	160	BAR
PRESSIONE DI ESERCIZIO: / OPERATING PRESSURE:	140	BAR
ALESAGGIO: / BORE:	125	mm
DIAMETRO STELO: / ROD DIAMETER:	80	mm
CORSA: / STROKE:	250	mm

01

FLUIDO UTILIZZATO: OLIO MINERALE / QUINTO LUBRIC 822-220
OPERATING MEDIUM: MINERAL OIL / QUINTO LUBRIC 822-220

POSIZ. ATTACCHI: CONN. LOCATIONS:	AMMORTIZZAMENTO DAMPING	SFIATO ARIA VENTING	VALV.NON RITORNO CHECK VALVE	ATTACCO MANDATA DELIVERY CONN.
LATO CULATTA BOTTOM SIDE	2	1	3	4
LATO STELO PISTON ROD SIDE	2	1	3	4

NOTE/REMARKS:
DIMENSIONS & STYLES AS PER ISO 6022 & DIN 24333
PURCHASE & INSPECTION AS PER DANIELI STANDARD 2.8.011

MANUFACTURE: "PARKER" TYPE MMA OR EQUAL
COSTRUTTORE: "PARKER" TIPO MMA O EQUIVALENTE

01 SPECIAL ACCESSORIES: BELLOW

Rev.	Date	Revisions description	Drawn	Checked	Approved
01	31.08.04	MODIFICATO DOVE INDICATO CON / MODIFIED WHERE INDICATED WITH 01	KANIA	MELCHIOR	SANDRIN
00	13.04.03	EMESSO PER COSTRUZIONE / ISSUED FOR CONSTRUCTION	KANIA	BAICI	DRIGANI

I

DANIELI
WEAN UNITED

Danieli item (TPC)
Contractual item
Obtained from
Replaces
Shop drw number
Rev.

Job No.
No. of parts
Progr. No.

Pattern DB.
Pattern code
Unit 8.280645.W
Item 312

Material DAL COMMERCIO FROM TRADE
Heat treatment

Classification / symbol 02916
Mass (Kg) 125,5
J=m.r² (Kg m²)

Title
CYLINDRO IDRAULICO
HYDRAULIC CYLINDER

Scale 1:5
Format A2
Nr. of sheets 001
Sheet 001

DANIELI drw number 4.950854.D
Revision 01

According to law DANIELI & C. SpA considers this document to be a company secret and therefore prohibits any person to reproduce it or make it known in whole or in part to other parties or to competitors without specific written authorization of DANIELI's Management

File number 4950854D_001_01

COMPUTER AIDED DESIGN

8.468555.M D408 DP00C8016411 COP15989-1

COP15989-1 DP00C8016411 D408 8.468555.M

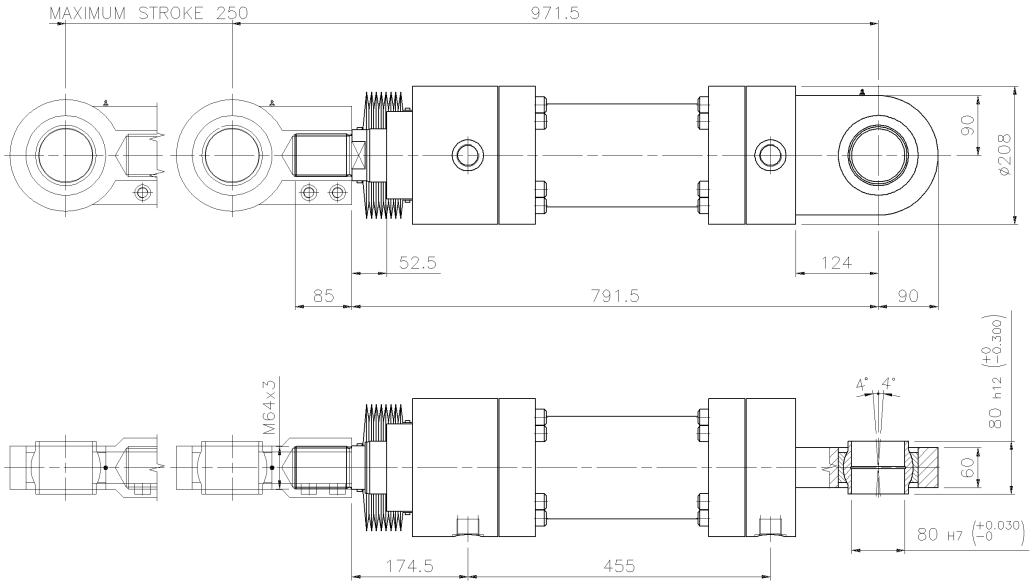

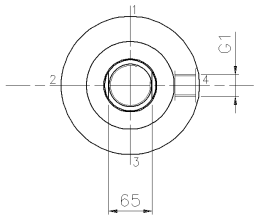

CILINDRO OLEODINAMICO SERVIZIO PESANTE – PRESSIONE NOMINALE 250 BAR
HYDRAULIC CYLINDER HEAVY DUTY – NOMINAL PRESSURE 250 BAR

PRESSIONE DI SISTEMA: SYSTEM PRESSURE:	160	BAR
PRESSIONE DI ESERCIZIO: OPERATING PRESSURE:	140	BAR
ALESAGGIO: BORE:	125	mm
DIAMETRO STELO: ROD DIAMETER:	80	mm
CORSA: STROKE:	250	mm

FLUIDO UTILIZZATO: QUINTOLUBRIC 822-220
OPERATING MEDIUM:

POSIZ. ATTACCHI: CONN. LOCATIONS:	AMMORTIZZAMENTO DAMPING	SFIATO ARIA VENTING	VALV.NON RITORNO CHECK VALVE	ATTACCO MANDATA DELIVERY CONN.
LATO CULATTA BOTTOM SIDE	2	1	3	4
LATO STELO PISTON ROD SIDE	2	1	3	4

NOTE/REMARKS:
APPROWIGIONAMENTO SECONDO NORMA DANIELI 2.8.011
PURCHASING AS PER DANIELI STANDARD 2.8.011
DIMENSIONI E TIPI SECONDO ISO 6022 E DIN 24333
DIMENSIONS & STYLES AS PER ISO 6022 & DIN 24333

MANUFACTURE: "PARKER" OR EQUAL, TYPE MMA STYLE MP5
COSTRUTTORE: "PARKER" O EQUIVALENTE TIPO MMA STILO MP5

Rev.	Date	Revisions description	Drawn	Checked	Approved
00	04.08.04	EMESSO PER COSTRUZIONE ISSUED FOR CONSTRUCTION	MINCA	MELCHIOR	SANDRIN

DANIELI
WEAN UNITED

Danieli item (TPC)
Contractual item
Obtained from
Replaces
Shop drw number
Rev.

Job No.
No. of parts
Progr. No.

Pattern DB.
Pattern code
Unit 8.271629.Z
Item 312

Material DAL COMMERCIO FROM TRADE
Heat treatment

Classification / symbol 02916
Mass (Kg) 125.5
J=m.r² (Kg m²)

Title
CYLINDRO IDRAULICO
HYDRAULIC CYLINDER

Scale 1:5
Format A2
Nr. of sheets 001
Sheet 001

DANIELI drw number 4.976587.H
Revision 00

According to law DANIELI & C. SpA considers this document to be a company secret and therefore prohibits any person to reproduce it or make it known in whole or in part to other parties or to competitors without specific written authorization of DANIELI's Management

File number 4976587H

COP15989-1 DP00G8016411 D491 8.468555.M

COMPUTER AIDED DESIGN

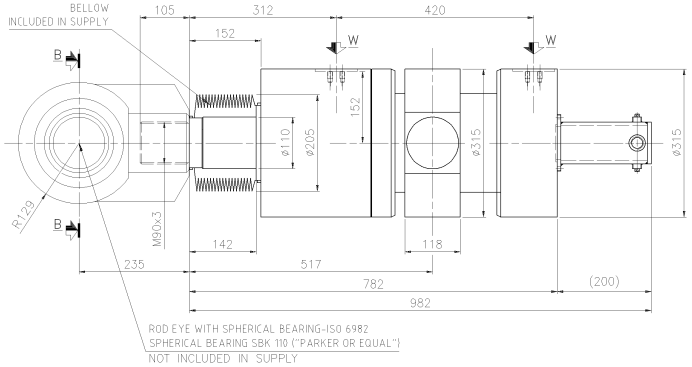

SEZIONE B–B
SECTION

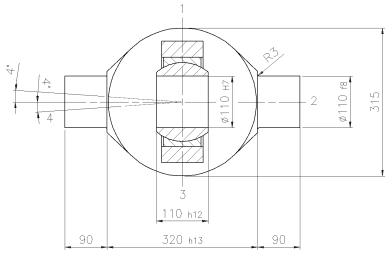

VISTA W
VIEW

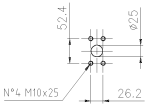

SEZIONE A–A
SECTION

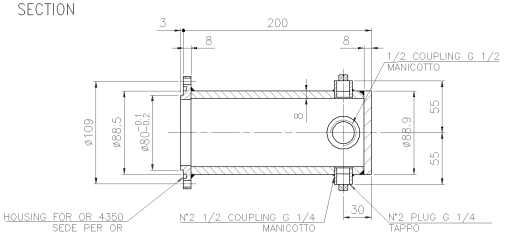

DETAIL OF LINEAR TRANSDUCER GUARD
PROTECTION – IP67
SCALE 1:2.5

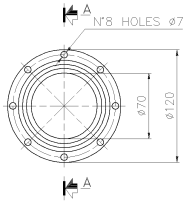

HYDRAULIC CYLINDER TYPE MMA
ORDER N°: 180/MT4/MMA/P/N/1/4/M/170/M/11/22 (ISO STYLE MT4)
MANUF.PARKER OR EQUAL
SPECIAL ACCESSORIES: BELLOW ALLUMIZED FIBER GLASS FABRIC

CILINDRO OLEODINAMICO SERVIZIO PESANTE – PRESSIONE NOMINALE 250 BAR
HYDRAULIC CYLINDER HEAVY DUTY – NOMINAL PRESSURE 250 BAR

PRESSIONE DI SISTEMA: SYSTEM PRESSURE:	160	BAR
PRESSIONE DI ESERCIZIO: OPERATING PRESSURE:	140	BAR
ALESAGGIO: BORE:	180	mm
DIAMETRO STELO: ROD DIAMETER:	110	mm
CORSA: STROKE:	170	mm

FLUIDO UTILIZZATO: QUINTO LUBRIC 822-220
OPERATING MEDIUM:

POSIZ. ATTACCHI: CONN. LOCATIONS:	AMMORTIZZAMENTO DAMPING	SFIATO ARIA VENTING	VALV.NON RITORNO CHECK VALVE	ATTACCO MANDATA DELIVERY CONN.
LATO CULATTA BOTTOM SIDE		2		1
LATO STELO PISTON ROD SIDE		2		1

NOTE/REMARKS:
APPROWIGIONAMENTO SECONDO NORMA DANIELI 2.8.011
PURCHASING AS PER DANIELI STANDARD 2.8.011

DETTAGLIO TRASDUTTORE LINEARE TEMPOSONIC
DETAIL OF LINEAR TRANSDUCER TEMPOSONIC
SCALE 1:2

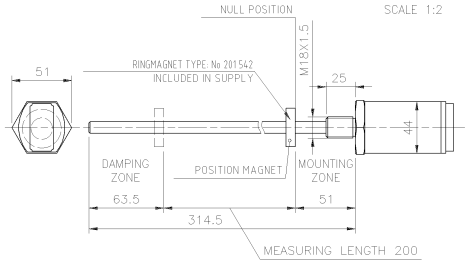

VERSIONI / VERSIONS		
	4.976588.S/002	HYDRAULIC CYLINDER WITH PROVISION FOR LINEAR TRANSDUCER "TEMPOSONIC III" MOD. RH-M-0200M-D70-1-S1G11 AND RELEVANT MAGNET. MAGNET INCLUDED IN THE SCOPE OF SUPPLY TRANSDUCER NOT INCLUDED IN THE SCOPE OF SUPPLY
	4.976588.S/001	HYDRAULIC CYLINDER SUPPLIED WITH LINEAR TRANSDUCER "TEMPOSONIC III" MOD. RH-M-0200M-D70-1-S1G11; RELEVANT MAGNET AND CONNECTOR. TRANSDUCER, MAGNET AND CABLE (LENGHT 10m) WITH CONNECTOR ALREADY INSTALLED AND TESTED. (CONNECTOR: TYPE 7 POLES – MTS-ST C09131D07)

Rev.	Date	Revisions description	Drawn	Checked	Approved
00	11.11.04	EMESSO PER COSTRUZIONE ISSUED FOR CONSTRUCTION	BOSIO	MELCHIOR	SANDRIN

DANIELI
WEAN UNITED

Danieli item (TPC)
Contractual item
Obtained from 4.951284.W
Replaces
Shop drw number
Rev.

Job No.
No. of parts
Progr. No.
Pattern DB.
Pattern code
Unit 8.271615.K
Item 304
Material DAL COMMERCIO FROM TRADE
Heat treatment
Classification / symbol 02916
Mass (Kg) 328
J=m.r² (Kg m²)

Title
CILINDRO IDRAULICO
HYDRAULIC CYLINDER

Scale 1:5
Format A1
Nr. of sheets 1
Sheet 001

DANIELI drw number 4.976588.S
Revision 00

According to law DANIELI & C. SpA considers this document to be a company secret and therefore prohibits any person to reproduce it or make it known in whole or in part to other parties or to competitors without specific written authorization of DANIELI's Management

File name: 4.976588.S
C0F15989-1 DP00G8016411 D492 B.468555.M

COMPUTER AIDED DESIGN

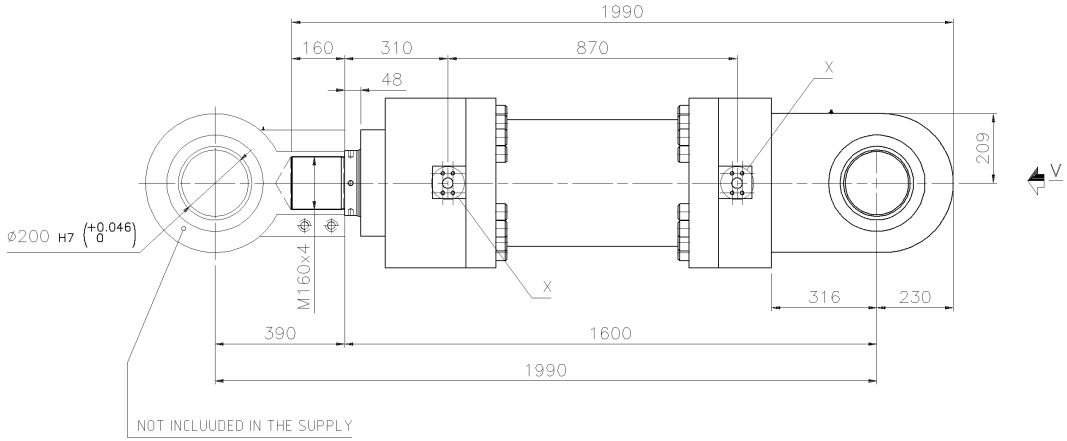

DETTAGLIO X
DETAIL
Scale: 1:5

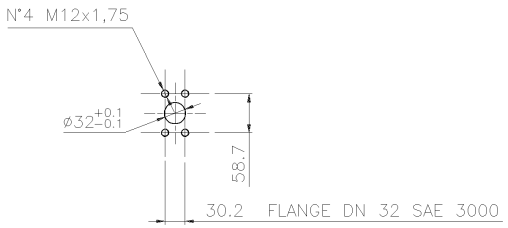

VISTA V
VIEW

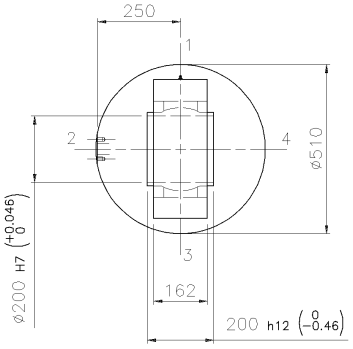

CILINDRO OLEODINAMICO SERVIZIO PESANTE – PRESSIONE NOMINALE 250 BAR
HYDRAULIC CYLINDER HEAVY DUTY – NOMINAL PRESSURE 250 BAR

PRESSIONE DI SISTEMA: / SYSTEM PRESSURE:	160	BAR
PRESSIONE DI ESERCIZIO: / OPERATING PRESSURE:	140	BAR
ALESAGGIO: / BORE:	320	mm
DIAMETRO STELO: / ROD DIAMETER:	200	mm
CORSA: / STROKE:	520	mm

FLUIDO UTILIZZATO: / OPERATING MEDIUM: HFD-QUINTOLUBRIC 822-220

POSIZ. ATTACCHI: / CONN. LOCATIONS:	AMMORTIZZAMENTO / DAMPING	SFIATO ARIA / VENTING	VALV.NON RITORNO / CHECK VALVE	ATTACCO MANDATA / DELIVERY CONN.
LATO CULATTA / BOTTOM SIDE	4	1	3	2
LATO STELO / PISTON ROD SIDE	4	1	3	2

NOTE/REMARKS:
APPROWIGIONAMENTO SECONDO NORMA DANIELI 2.8.011
PURCHASING AS PER DANIELI STANDARD 2.8.011
DIMENSIONI E TIPI SECONDO ISO 6022 E DIN 24333
DIMENSIONS & STYLES AS PER ISO 6022 & DIN 24333

HYDRAULIC CYLINDER TYPE: MMA
STYLE: MP5-ø320/ø200x520
MANUF.: PARKER OR EQUAL

Rev.	Date	Revisions description	Drawn	Checked	Approved
00	31.08.04	EMESSO PER COSTRUZIONE / ISSUED FOR CONSTRUCTION	ROJ	PAWLOW	MELCHIOR

DANIELI
WEAN UNITED

Danieli item (TPC)
Contractual item
Obtained from
Replaces
Shop drw number | Rev.

Job No. | No. of parts | Progr. No.

Pattern DB. | Pattern code | Unit 8.295068.K | Item 304

Material: DAL COMMERCIO FROM TRADE | Heat treatment

Classification / symbol: 02916 | Mass (Kg): 1560 | J=m.r² (Kg m²)

Title
CYLINDRO IDRAULICO
HYDRAULIC CYLINDER

Scale 1:10
Format A2

DANIELI drw number: 4.996563.M | Revision: 00 | Nr. of sheets 1 | Sheet 001

According to law DANIELI & C. SpA considers this document to be a company secret and therefore prohibits any person to reproduce it or make it known in whole or in part to other parties or to competitors without specific written authorization of DANIELI's Management

File number: 4996563M

COMPUTER AIDED DESIGN

COP15989-1 DP00G8016411 D540 8.468555.M

VISTA A
VIEW

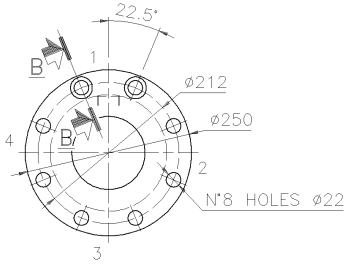

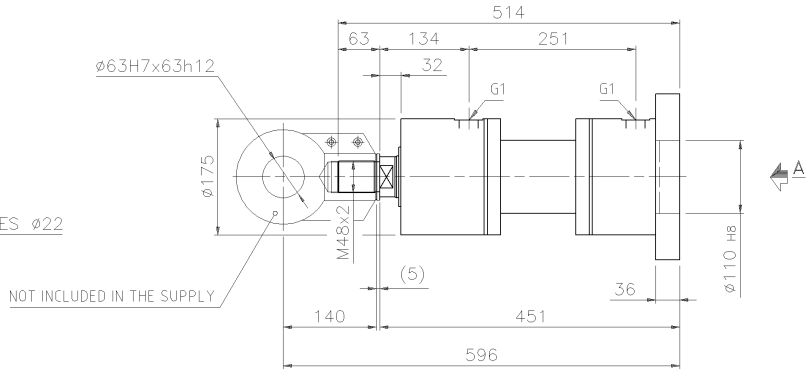

SEZIONE B–B
SECTION
Scale: 1:2

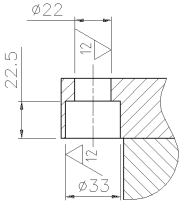

CILINDRO OLEODINAMICO SERVIZIO PESANTE – PRESSIONE NOMINALE 250 BAR
HYDRAULIC CYLINDER HEAVY DUTY – NOMINAL PRESSURE 250 BAR

PRESSIONE DI SISTEMA: SYSTEM PRESSURE:	200	BAR
PRESSIONE DI ESERCIZIO: OPERATING PRESSURE:	140	BAR
ALESAGGIO: BORE:	100	mm
DIAMETRO STELO: ROD DIAMETER:	63	mm
CORSA: STROKE:	80	mm

FLUIDO UTILIZZATO: HFD–QUINTOLUBRIC 822–220
OPERATING MEDIUM:

POSIZ. ATTACCHI: CONN. LOCATIONS:	AMMORTIZZAMENTO DAMPING	SFIATO ARIA VENTING	VALV.NON RITORNO CHECK VALVE	ATTACCO MANDATA DELIVERY CONN.
LATO CULATTA BOTTOM SIDE	2	4	3	1
LATO STELO PISTON ROD SIDE	2	4	3	1

NOTE/REMARKS:
APPROWIGIONAMENTO SECONDO NORMA DANIELI 2.8.011
PURCHASING AS PER DANIELI STANDARD 2.8.011
DIMENSIONI E TIPI SECONDO ISO 6022 E DIN 24333
DIMENSIONS & STYLES AS PER ISO 6022 & DIN 24333

HYDRAULIC CYLINDER TYPE MMA STYLE MF4
ROUND FLANGE MOUNTINGS
MANUFACTURE: PARKER OR EQUAL

Rev.	Date	Revisions description	Drawn	Checked	Approved
00	20.04.04	EMESSO PER COSTRUZIONE ISSUED FOR CONSTRUCTION	ROJ	PAWLOW	MELCHIOR

DANIELI
WEAN UNITED

Danieli item (TPC)
Contractual item
Obtained from 4.950770.V–REV.00
Replaces
Shop drw number
Rev.

Job No.
No. of parts
Progr. No.
Pattern DB.
Pattern code
Unit 8.272151.K
Item 301
Material DAL COMMERCIO FROM TRADE
Heat treatment
Classification / symbol 02916
Mass (Kg) 67
J=m.r² (Kg m²)

Title
CILINDRO IDRAULICO
HYDRAULIC CYLINDER

Scale 1:5
Format A2
DANIELI drw number 5.013448.S
Revision 00
Nr. of sheets 001
Sheet 001

According to law DANIELI & C. SpA considers this document to be a company secret and therefore prohibits any person to reproduce it or make it known in whole or in part to other parties or to competitors without specific written authorization of DANIELI's Management

File number 5013448S

COMPUTER AIDED DESIGN

COP15989-1 DP00G8016411 D558 8.468555.M

VISTA A
VIEW

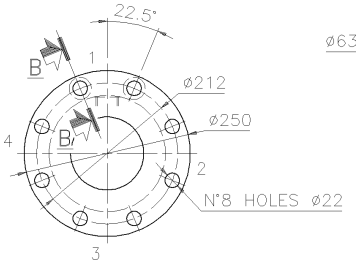

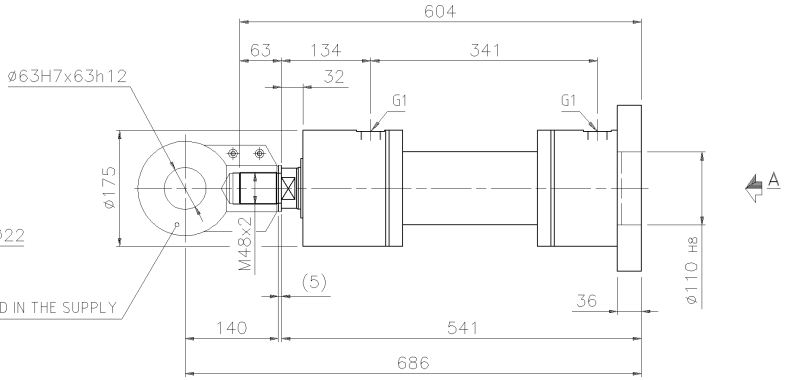

SEZIONE B–B
SECTION
Scale: 1:2

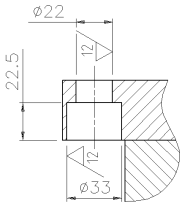

CILINDRO OLEODINAMICO SERVIZIO PESANTE – PRESSIONE NOMINALE 250 BAR
HYDRAULIC CYLINDER HEAVY DUTY – NOMINAL PRESSURE 250 BAR

PRESSIONE DI SISTEMA: SYSTEM PRESSURE:	200	BAR
PRESSIONE DI ESERCIZIO: OPERATING PRESSURE:	140	BAR
ALESAGGIO: BORE:	100	mm
DIAMETRO STELO: ROD DIAMETER:	63	mm
CORSA: STROKE:	170	mm

FLUIDO UTILIZZATO: HFD–QUINTOLUBRIC 822–220
OPERATING MEDIUM:

POSIZ. ATTACCHI: CONN. LOCATIONS:	AMMORTIZZAMENTO DAMPING	SFIATO ARIA VENTING	VALV.NON RITORNO CHECK VALVE	ATTACCO MANDATA DELIVERY CONN.
LATO CULATTA BOTTOM SIDE	2	4	3	1
LATO STELO PISTON ROD SIDE	2	4	3	1

NOTE/REMARKS:
APPROWIGIONAMENTO SECONDO NORMA DANIELI 2.8.011
PURCHASING AS PER DANIELI STANDARD 2.8.011
DIMENSIONI E TIPI SECONDO ISO 6022 E DIN 24333
DIMENSIONS & STYLES AS PER ISO 6022 & DIN 24333

HYDRAULIC CYLINDER TYPE MMA STYLE MF4
ROUND FLANGE MOUNTINGS
MANUFACTURE: PARKER OR EQUAL

Rev.	Date	Revisions description	Drawn	Checked	Approved
00	20.04.04	EMESSO PER COSTRUZIONE ISSUED FOR CONSTRUCTION	ROJ	PAWLOW	MELCHIOR

DANIELI
WEAN UNITED

Danieli item (TPC)
Contractual item
Obtained from 4.950739.H–REV.00
Replaces
Shop drw number
Rev.

Job No.
No. of parts
Progr. No.
Pattern DB.
Pattern code
Unit 8.272151.K
Item 302
Material DAL COMMERCIO FROM TRADE
Heat treatment
Classification / symbol 02916
Mass (Kg) 71
J=m.r² (Kg m²)

Title
CILINDRO IDRAULICO
HYDRAULIC CYLINDER

Scale 1:5
Format A2
DANIELI drw number 5.013449.T
Revision 00
Nr. of sheets 1
Sheet 001

According to law DANIELI & C. SpA considers this document to be a company secret and therefore prohibits any person to reproduce it or make it known in whole or in part to other parties or to competitors without specific written authorization of DANIELI's Management

File number 5013449T

COMPUTER AIDED DESIGN

COP15989-1 DP00G8016411 D559 8.468555.M

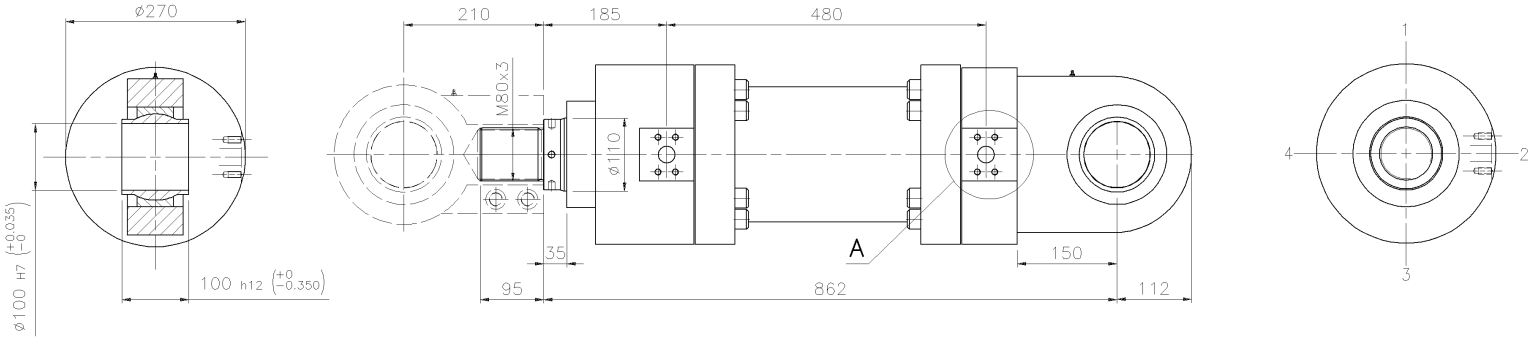

DETAIL A (1:2.5)

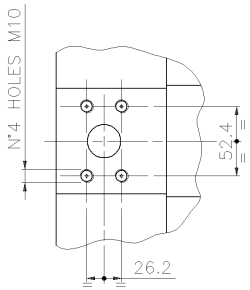

CILINDRO OLEODINAMICO – PRESSIONE NOMINALE 250 BAR – SERIE ISO 6022
HYDRAULIC CYLINDER – NOMINAL PRESSURE 250 BAR – SERIES ISO 6022

PRESSIONE DI SISTEMA: / SYSTEM PRESSURE:	160 BAR
PRESSIONE DI ESERCIZIO: / OPERATING PRESSURE:	130 BAR
ALESAGGIO: / BORE:	160 mm
DIAMETRO STELO: / ROD DIAMETER:	110 mm
CORSA: / STROKE:	245 mm
FLUIDO UTILIZZATO: / OPERATING MEDIUM:	HFD-QUINTOLUBRIC 822-220
ATTACCHI: / CONNECTION:	4 BOLT-FLANGE SAE 3000 PSI – DN25
CONSTRUTTORE:	PARKER 160/110-245 MP5 – MMA O EQUIVALENTE
MANUFACTURE:	PARKER 160/110-245 MP5 – MMA OR EQUAL

POSIZ. ATTACCHI: CONN. LOCATIONS:	AMMORTIZZAMENTO CUSHION	SFIATO ARIA VENTING	VALV.NON RITORNO CHECK VALVE	ATTACCO MANDATA DELIVERY CONN.
LATO CULATTA BOTTOM SIDE	4	1	1	2
LATO STELO PISTON ROD SIDE	4	1	1	2

NOTE/REMARKS:
APPROVVIGIONAMENTO SECONDO NORMA DANIELI 2.8.011
PURCHASING AS DANIELI STANDARD 2.8.011

Rev.	Date	Revisions description	Drawn	Checked	Approved
00	16.11.05	EMESSO PER COSTRUZIONE / ISSUED FOR CONSTRUCTION	Borejko	Pawlowsk	Melchior

DANIELI
WEAN UNITED

Danieli item (TPC)
Contractual item
Obtained from 4.551616.S
Replaces
Shop drw number | Rev.

Job No. | No. of parts | Progr. No.

Pattern DB. | Pattern code | Unit 8.239283.N | Item 301

Material: DAL COMMERCIO FROM TRADE | Heat treatment

Classification / symbol: 02916 | Mass (Kg): 240 | J=m.r² (Kg m²)

Title
CYLINDRO IDRAULICO
HYDRAULIC CYLINDER

Scale 1:5
Format A2
Nr. of sheets 1
Sheet 001

DANIELI drw number: 5.020063.X
Revision: 00

According to law DANIELI & C. SpA considers this document to be a company secret and therefore prohibits any person to reproduce it or make it known in whole or in part to other parties or to competitors without specific written authorization of DANIELI's Management

File number: 5020063X_001_00

COMPUTER AIDED DESIGN

COP15989-1 DP00G8016411 D579 8.468555.M

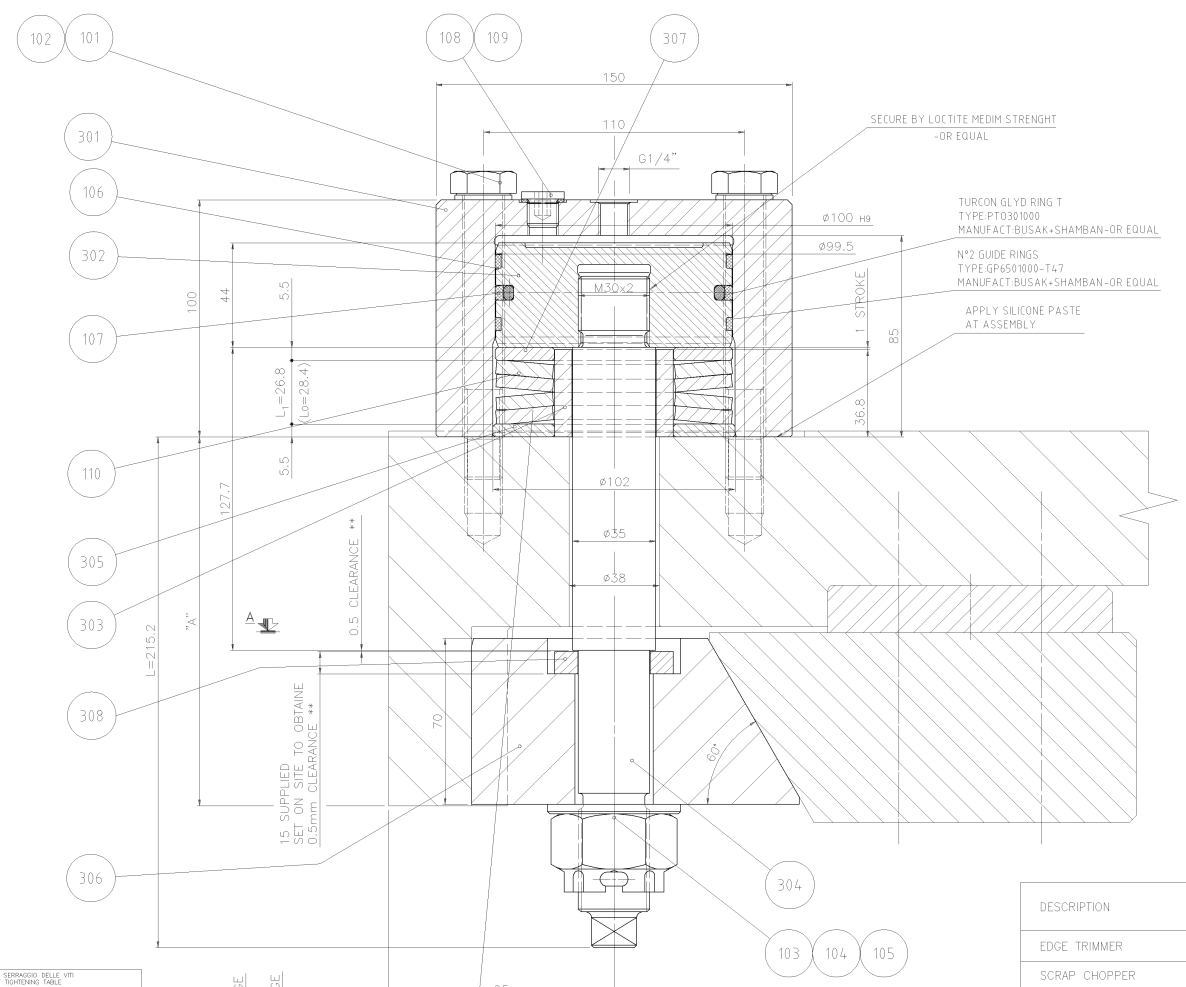

SEZIONE A–A
SECTION

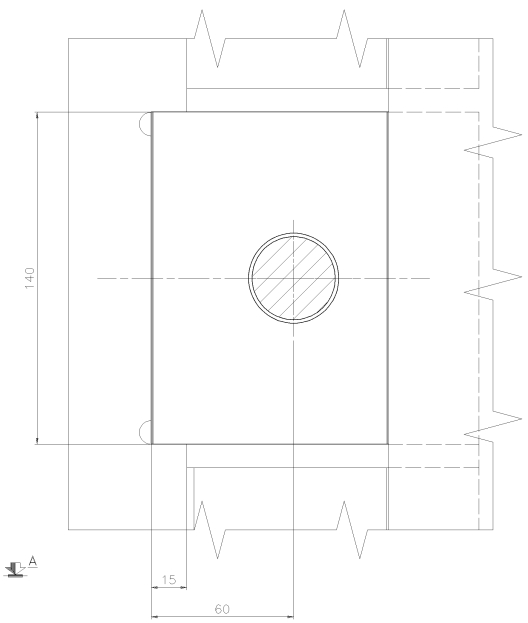

DESCRIPTION	"A"
EDGE TRIMMER	157,5
SCRAP CHOPPER	155,5
PINCH ROLL	155,5

TABELLA SERRAGGIO DELLE VITI
BOLT TIGHTENING TABLE

DIAMETRO NOMINALE FILETTATURA / NOMINAL THREAD DIAMETER d (mm)	CLASSE DELLA VITE / BOLT CLASS 8.8 Ts (daNm)	8.8 Ns (kN)	10.9 Ts (daNm)	10.9 Ns (kN)	12.9 Ts (daNm)	12.9 Ns (kN)
12	9.0	38	11.3	47	13.6	56
14	14.4	52	18.0	64	21.6	77
16	22.5	70	28.1	88	33.7	106
18	30.9	86	38.7	108	46.4	130
20	43.9	110	54.9	137	65.9	164
22	59.7	136	74.7	170	89.6	204
24	75.9	158	94.9	198	113.9	238
27	111.0	206	138.8	257	166.6	308
30	150.8	251	188.5	314	226.2	377
36X3	263.5	366	329.8	458	395.8	550
42X3	421.7	502	526.7	627	632.0	752
48X3	632.6	659	790.0	823	948.0	988

Ts = COPPIA DI SERRAGGIO / TIGHTENING TORQUE
Ns = FORZA DI SERRAGGIO / TIGHTENING FORCE

ALL SCREWS USED TO BOLT ROTATING PARTS AND ALL THE ONES MARKED WITH : *
TO BE LOCKED WITH IRON WIRE

FISSARE CON FILO DI FERRO TUTTE LE VITI USATE SU ORGANI ROTANTI PIU' TUTTE LE POSIZIONI EVIDENZIATE CON : *

ALL SCREWS HAVE TO BE DRY, NOT OILED

TUTTE LE VITI DEVONO ESSERE SECCHE, NON OLIATE

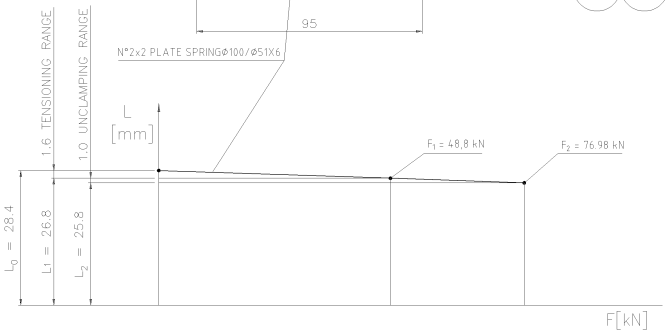

TECHNICAL DATA OF HYDRAULIC CYLINDER	
TENSIONING FORCE	48.8 kN
MAX. STROKE	2,6 mm
MAX. PRESSURE FOR CLAMPING BY SPRINGS	10 BAR
PRESSURE FOR UNCLAMPING	140 BAR
CYLINDER PUSH FORCE	110 kN

Rev.	Date	Revisions description	Drawn	Checked	Approved
00A	05.10.04	AGGIORNATO GRAFICAMENTE / GRAPHICALLY UPDATED	DORIGO	MELCHIOR	SANDRIN
00	15.04.02	EMESSO PER COSTRUZIONE / ISSUED FOR CONSTRUCTION	Kania	Melchior	Drigani

DANIELI
WEAN UNITED

Danieli item (TPC)
Contractual item
Obtained from
Replaces
Shop drw number | Rev.

Job No. | No. of parts | Progr. No.

Pattern DB. | Pattern code | Unit 8.244932.E | Item 324

Material | Heat treatment

Classification / symbol COM–TRM | Mass (Kg) 23 | J=m.r² (Kg m²)

Title
DISPOSITIVO DI BLOCCAGGIO
CLAMPING UNIT

Scale 1:1
Format A1

DANIELI drw number 8.244938.L
Revision 00A
Nr. of sheets 1
Sheet 001

According to law DANIELI & C. SpA considers this document to be a company secret and therefore prohibits any person to reproduce it or make it known in whole or in part to other parties or to competitors without specific written authorization of DANIELI's Management

File name: 08244938.L 00A.dwg

COMPUTER AIDED DESIGN

C0F15989-1 DP0000014041 AJ385 8.271629.7

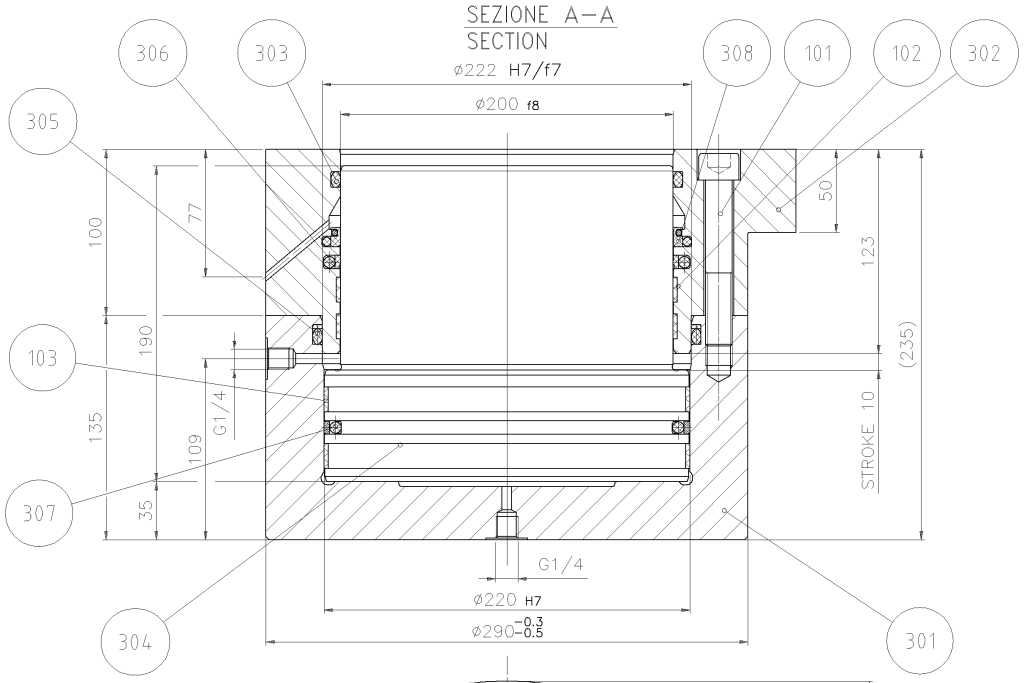

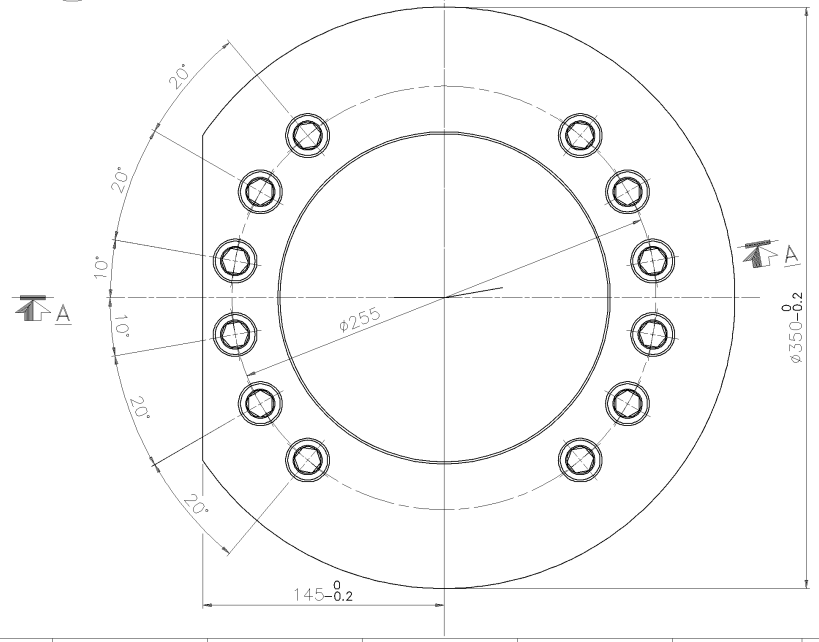

TABELLA SERRAGGIO DELLE VITI
BOLT TIGHTENING TABLE

DIAMETRO NOMINALE FILETTATURA / NOMINAL THREAD DIAMETER d (mm)	CLASSE DELLA VITE / BOLT CLASS 8.8 Ts (daNm)	8.8 Ns (kN)	10.9 Ts (daNm)	10.9 Ns (kN)	12.9 Ts (daNm)	12.9 Ns (kN)
12	9.0	38	11.3	47	13.6	56
14	14.4	52	18.0	64	21.6	77
16	22.5	70	28.1	88	33.7	106
18	30.9	86	38.7	108	46.4	130
20	43.9	110	54.9	137	65.9	164
22	59.7	136	74.7	170	89.6	204
24	75.9	158	94.9	198	113.9	238
27	111.0	206	138.8	257	166.6	308
30	150.8	251	188.5	314	226.2	377
36X3	263.5	366	329.8	458	395.8	550
42X3	421.7	502	526.7	627	632.0	752
48X3	632.6	659	790.0	823	948.0	988

Ts = COPPIA DI SERRAGGIO / TIGHTENING TORQUE
Ns = FORZA DI SERRAGGIO / TIGHTENING FORCE

ALL SCREWS USED TO BOLT ROTATING PARTS AND ALL THE ONES MARKED WITH : *
TO BE LOCKED WITH IRON WIRE

FISSARE CON FILO DI FERRO TUTTE LE VITI USATE SU ORGANI ROTANTI PIU' TUTTE LE POSIZIONI EVIDENZIATE CON : *

ALL SCREWS HAVE TO BE DRY, NOT OILED

TUTTE LE VITI DEVONO ESSERE SECCHE, NON OLIATE

Rev.	Date	Revisions description	Drawn	Checked	Approved
00	19.10.04	EMESSO PER COSTRUZIONE ISSUED FOR CONSTRUCTION	ROJ	PAWLOW	MELCHIOR

DANIELI
WEAN UNITED

Danieli item (TPC)
Contractual item
Obtained from 8.272165.H
Replaces
Shop drw number | Rev.

Job No. | No. of parts | Progr. No.
Pattern DB. | Pattern code | Unit | Item
Material | Heat treatment
Classification / symbol: HCI–220–200–10–14 | Mass (Kg): 106 | J=m.r² (Kg m²)

Title
CILINDRO IDRAULICO SOLLEVAMENTO CASSETTO
HYDRAULIC CYLINDER FOR ROLL SET LIFTING

Scale 1:2
Format A2
DANIELI drw number: 8.269535.H
Revision: 00
Nr. of sheets 1
Sheet 001

According to law DANIELI & C. SpA considers this document to be a company secret and therefore prohibits any person to reproduce it or make it known in whole or in part to other parties or to competitors without specific written authorization of DANIELI's Management

File number: 8269535H

COMPUTER AIDED DESIGN

COP15989-1 DP00G8014501 L304 8.272060.X

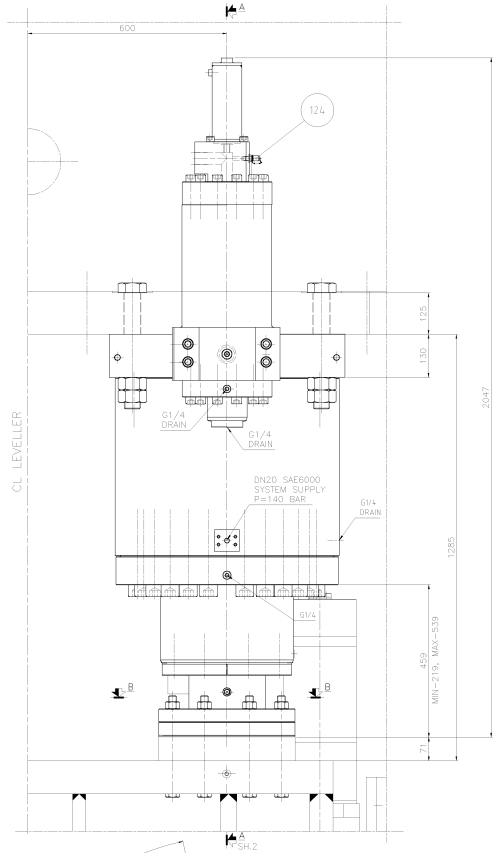

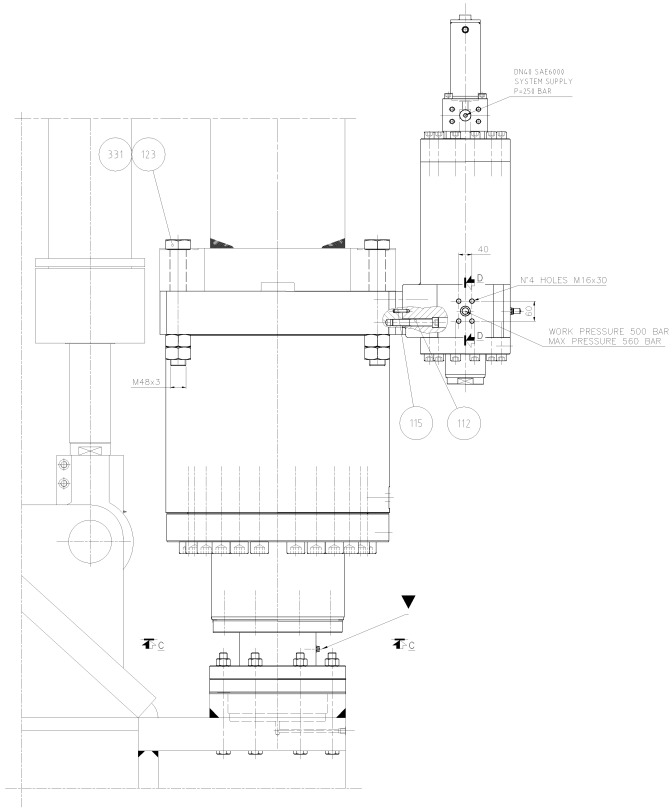

SEZIONE D–D
SECTION
Scale: 1:1

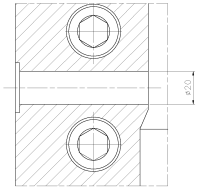

TABELLA SERRAGGIO DELLE VITI BOLT TIGHTENING TABLE						
DIAMETRO NOMINALE FILETTATURA NOMINAL THREAD DIAMETER d (mm)	CLASSE DELLA VITE BOLT CLASS					
	8.8		10.9		12.9	
	Ts (daNm)	Ns (kN)	Ts (daNm)	Ns (kN)	Ts (daNm)	Ns (kN)
12	9.0	38	11.3	47	13.6	56
14	14.4	52	18.0	64	21.6	77
16	22.5	70	28.1	88	33.7	106
18	30.9	86	38.7	108	46.4	130
20	43.9	110	54.9	137	65.9	164
22	59.7	136	74.7	170	89.6	204
24	75.9	158	94.9	198	113.9	238
27	111.0	206	138.8	257	166.6	308
30	150.8	251	188.5	314	226.2	377
36X3	263.5	366	329.8	458	395.8	550
42X3	421.7	502	526.7	627	632.0	752
48X3	632.6	659	790.0	823	948.0	988

Ts = COPPIA DI SERRAGGIO
TIGHTENING TORQUE

Ns = FORZA DI SERRAGGIO
TIGHTENING FORCE

ALL SCREWS USED TO BOLT ROTATING PARTS AND ALL THE ONES MARKED WITH * ARE TO BE LOCKED WITH IRON WIRE

FISSARE CON FILO DI FERRO TUTTE LE VITI USATE SU ORGANI ROTANTI PIU' TUTTE LE POSIZIONI EVIDENZIATE CON : *

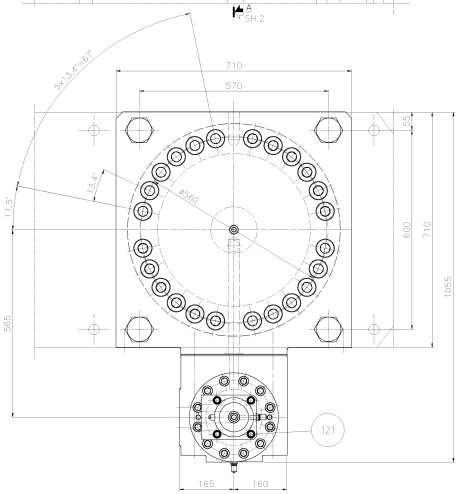

SEZIONE C–C
SECTION

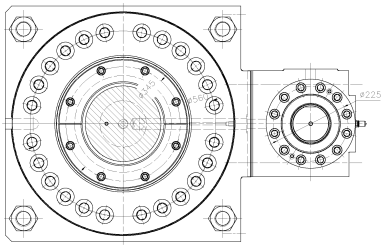

SEZIONE B–B
SECTION

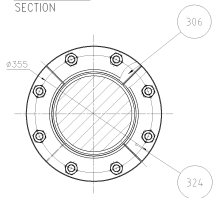

INSTALL TOP PLATE'S CUT ROTATED 90° FROM BOTTOM PLATE'S CUT

IMPIANTO MANUALE / CENTRALIZZATO A GRASSO
MANUAL / CENTRALIZED GREASE SYSTEM

N° PUNTI CENTRALIZZATI / CENTRALIZED POINTS ● ELENCO PUNTI / LIST
N° 1 PUNTI MANUALI / MANUAL POINTS ▼

DISPOSIZIONE: LINEA ALIMENTAZIONE LATO
ARRANGEMENT OF FEEDER LINE: A1

IMPIEGARE GRASSO TIPO / USE GREASE TYPE N.0.000.001

Rev.	Date	Revisions description	Drawn by	Checked by	Approved by
02A	6 Mar 2006	AGGIORNATO GRAFICAMENTE FOGLIO 2 GRAPHICALLY UPDATED SHEET 2	Dario	Burlini	Sandro
02	30 Sep 2005	AGGIORNAMENTO FOGLIO 002 UPDATED SHEET 002	Tarcisio	Burlini	Sandro
01	14 Oct 2004	AGGIORNAMENTO FOGLIO 002 UPDATED SHEET 002	Artur	Burlini	Sandro
00	1 Sep 2004	EMESSO PER COSTRUZIONE ISSUED FOR CONSTRUCTION	Ilaj	Pianton	Mirchior

Material 1 (where not indicated on drawing) — Side of supply Mat.1 — Daniell Supply Ski. — Supply Chain — Pattern DB
Material 2 — Side of supply Mat.2 — Daniell Supply Ski. — Supply Chain — Casting Code
Material 3 — Side of supply Mat.3 — Daniell Supply Ski. — Supply Chain
Heat Treatment
On Drawing Symbol if required.
Coating
On Drawing Symbol if required.
Unspecified radius (mm) — Unspecified bevels (mm) — Dimensions without tolerance as per — Machining — Max. Welding Class

Project Name:

DANIELI WEAN UNITED

Job n.
Ordered from
Replacing

Family code/Machine code: HCM50 400 00320 50
Weight (kg): 2690 — Sign.1

Title:
CILINDRO IDRAULICO REGOLAZIONE GAP
HYDRAULIC GAP ADJUSTMENT CYLINDER

Scale: 1:5
Format: A0

DANIELI Drawing number: 8.272150.W
Revision: 02A
No. of sheet: 002
Sheet: 001 — Total:

According to law DANIELI & C. SpA considers this document to be a company secret and therefore prohibits any person to reproduce or disclose it or make it known in whole or in part to other parties or its competitors without specific written authorization of DANIELI Management.

File: 8272150W-1 — DP00C0010159 — 1010 — DP00C0010159

DP00C0010159 — 1010 — DP00C0010159 — DP00C0010159 — 8272150W-1

COMPUTER AIDED DESIGN -4-

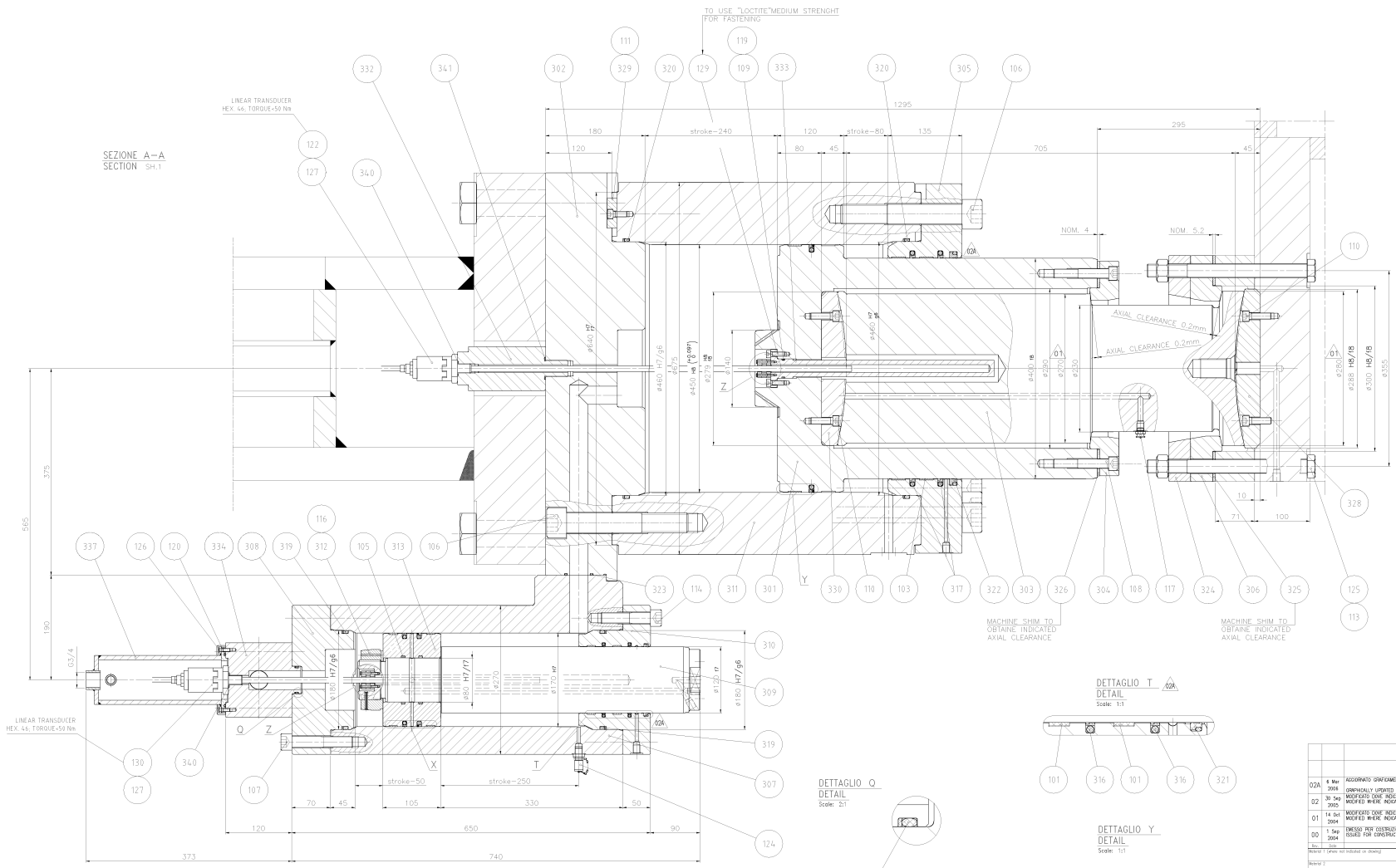

DETTAGLIO T
DETAIL
Scale: 1:1

DETTAGLIO Q
DETAIL
Scale: 2:1

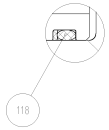

DETTAGLIO Y
DETAIL
Scale: 1:1

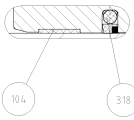

DETTAGLIO Z
DETAIL
Scale: 1:1

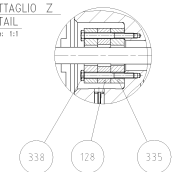

DETTAGLIO X
DETAIL
Scale: 1:1

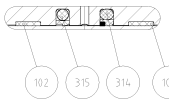

Rev.	Date	Revisions description	Drawn by	Checked by	Approved by
02A	8 Mar 2006	AGGIORNATO GRAFICAMENTE / GRAPHICALLY UPDATED 02A	Dario	Bartini	Sandro
02	30 Sep 2005	MODIFICATO DOVE INDICATO CON 1x / MODIFIED WHERE INDICATED WITH 02	Tancsor	Bartini	Sandro
01	14 Oct 2004	MODIFICATO DOVE INDICATO CON 2x / MODIFIED WHERE INDICATED WITH 01	Artur	Bartini	Sandro
00	1 Sep 2004	EMESSO PER COSTRUZIONE / ISSUED FOR CONSTRUCTION	Raj	Pandem	Mathias

Material 1 (where not indicated on drawing) — Stock of supply Mat.1 — Daniell Supply Ctrl. — Supply Chain — Pattern DB
Material 2 — Stock of supply Mat.2 — Daniell Supply Ctrl. — Supply Chain — Coating Code
Material 3 — Stock of supply Mat.3 — Daniell Supply Ctrl. — Supply Chain
Heat Treatment
On Drawing Symbol if required.
Coating
On Drawing Symbol if required.
Unspecified radius (max) — Unspecified bevels (max) — Dimensions without tolerance as per — Machining — Max. Welding Class

Project Name:

DANIELI WEAN UNITED

Job n.
Ordered from
Customer
Family code/Machine code: HCM50 400 00320 50
Weight (kg): 2690
Sheet N.

Title: CILINDRO IDRAULICO REGOLAZIONE GAP
HYDRAULIC GAP ADJUSTMENT CYLINDER

Scale: 1:2.5
Format: A0
Sheet: 002
Total: 002

DANIELI Drawing number: 8.272150.W
Revision: 02A
DANIELI Item number
No. of sheets: 002

According to law DANIELI & C. SpA considers this document to be a company secret and therefore prohibits any person to reproduce or disclose it or make it known in whole or in part to other parties or to competitors without specific written authorization of DANIELI Management.

File: 8272150W-A2 DP00C0010159 DB10 DP00C0010159

DP00C0010159 DB10 DP00C0010159 DP00C0010159 COPYRIGHT

COMPUTER AIDED DESIGN -A